PROVIDED AS A COURTESY BY:
PACIFIC
PIPELINE SUPPLY

Rincon del Diablo Municipal Water District
LIST OF STANDARD DRAWINGS

DRAWING NUMBER	TITLE
W-1	STANDARD DRAWING SHEET
W-2	STANDARD SYMBOLS, ABBREVIATIONS & LEGENDS
W-3	1-INCH WATER SERVICE (5/8" & 1" METERS)
W-4	2-INCH WATER SERVICE (1½" & 2" METERS)
W-5	3-INCH METER & LARGER
W-6	BACKFLOW PREVENTER
W-7A	FIRE DETECTOR R.P.D.A. ASSEMBLY
W-7B	FIRE SPRINKLER SYSTEM (1" METER)
W-8	LATERAL LOCATION
W-9A	1-INCH COMBINATION AIR & VACUUM ASSEMBLY
W-9B	AIR & VACUUM ASSEMBLY COVER
W-10	2-INCH COMBINATION AIR & VACUUM ASSEMBLY
W-11	2-INCH BLOW OFF ASSEMBLY
W-12	4-INCH (AND LARGER) BLOW OFF ASSEMBLY
W-13	BLANK PAGE
W-14A	6-INCH FIRE HYDRANT ASSEMBLY
W-14B	RETAINING WALL & TRAFFIC CONTROL
W-15A	WATER SAMPLING STATION
W-15B	WATER SAMPLING STATION COVER
W-16	TRENCH EXCAVATION & BACKFILL FOR WATER
W-17A	OUTLET CONNECTION TO STEEL PIPE
W-17B	GATE WELL INSTALLATION
W-18	CONCRETE THRUST BLOCKS
W-19	ANCHOR BLOCKS
W-20	CONCRETE CYLINDER PIPE JOINT DETAILS
W-21	WELDED STEEL CML&C PIPE
W-22	STANDARD SUPPORT FOR UNDERCUT SEWER PIPE
W-23	ALTERNATE METHODS OF WATERLINE INSTALLATIONS
W-24	SLOPE PROTECTION FOR GRADES 30 PERCENT AND LARGER
W-25	BLANK PAGE
W-26	CHAIN LINK FENCE AND GATE DETAILS

PROVIDED AS A COURTESY BY:
PACIFIC
PIPELINE SUPPLY

PROVIDED AS A COURTESY BY:
PACIFIC
PIPELINE SUPPLY

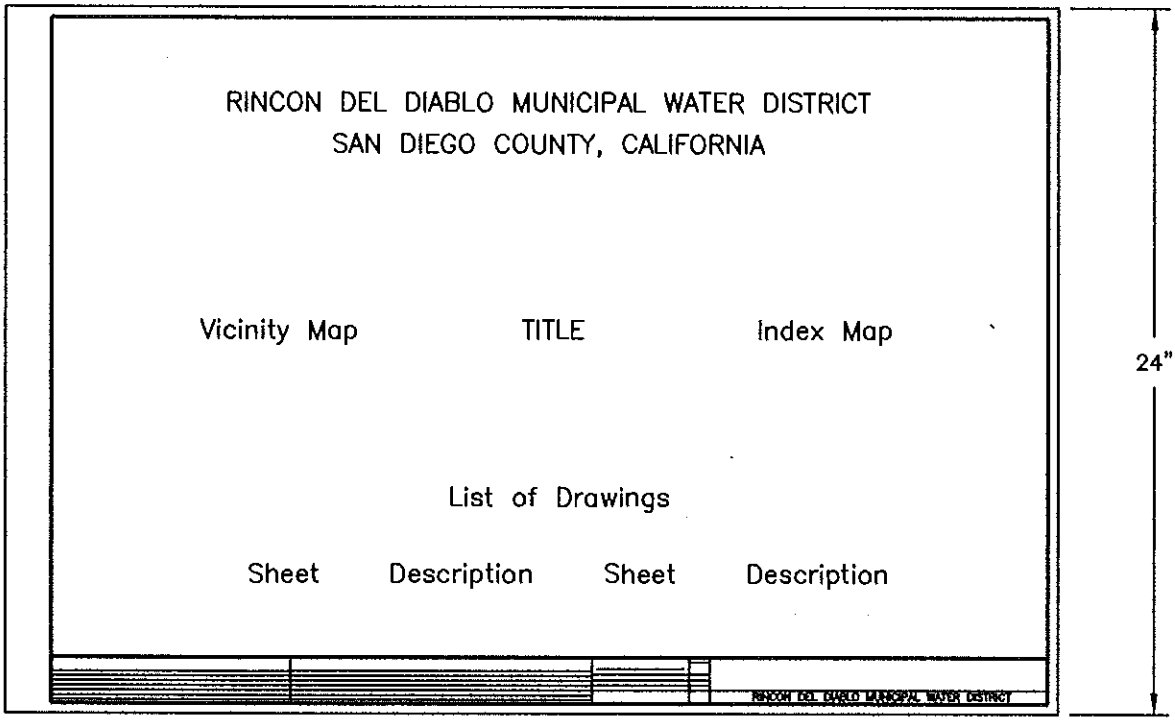

TYPICAL TITLE SHEET

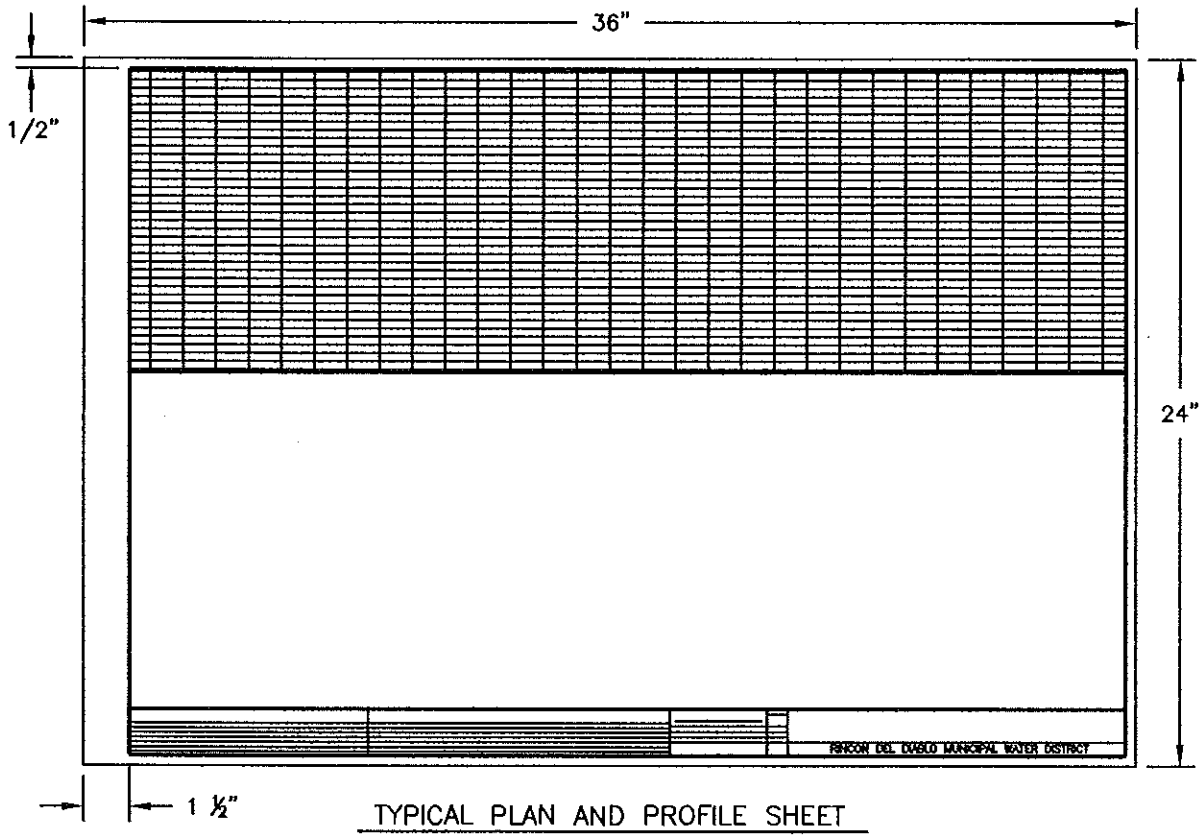

TYPICAL PLAN AND PROFILE SHEET

RINCON DEL DIABLO MUNICIPAL WATER DISTRICT

CHECKED BY	DATE	STANDARD DRAWING SHEET	DRAWING NO.
APPROVED BY	DATE		W-1

PROVIDED AS A COURTESY BY:
PACIFIC
PIPELINE SUPPLY

STANDARD LEGEND

10" (TYPE) WATER MAIN	FH FIRE HYDRANT
6" LINE VALVE	GV GATE VALVE
FIRE HYDRANT	MH MANHOLE
2" WATER SERVICE CONNECTION	BO BLOW OFF
2" BLOW OFF	AV AIR & VACUUM VALVE
1" AIR AND VACUUM VALVE	BC BEGIN CURVE
6" CHECK VALVE	EC END CURVE
6" W EXISTING WATER MAIN	BVC BEGIN VERTICAL CURVE
6" EXISTING LINE VALVE	EVC END VERTICAL CURVE
EXISTING FIRE HYDRANT	NIC NOT IN CONTRACT
2" EXISTING WATER SERVICE	BM BENCHMARK
2" EXISTING BLOW OFF	CI CAST IRON
1" EXISTING AIR & VACUUM VALVE	RCP REINFORCED CONCRETE PIPE
EDGE OF PAVEMENT	SCP STEEL CYLINDER PIPE
WATER DISTRICT BOUNDARY	CML&C CEMENT MORTAR LINED & COATED
3" G GAS LINE	CMP CORRUGATED METAL PIPE
18" STORM DRAIN OR CULVERT	PVC POLYVINYL CHLORIDE PIPE
8" S SEWER LINE	DIP DUCTILE IRON PIPE
3" MTD ELECTRICAL & TELEPHONE CONDUIT	RW RECYCLE WATER
POWER POLE	RPDA REDUCED PRESSURE DETECTOR ASSEMBLY
WELL	
ANCHOR OR DEADMAN	

RINCON DEL DIABLO MUNICIPAL WATER DISTRICT

CHECKED BY	DATE	STANDARD SYMBOLS, ABBREVIATIONS & LEGENDS	DRAWING NO.
APPROVED BY	DATE		W-2

PROVIDED AS A COURTESY BY:
PACIFIC
PIPELINE SUPPLY

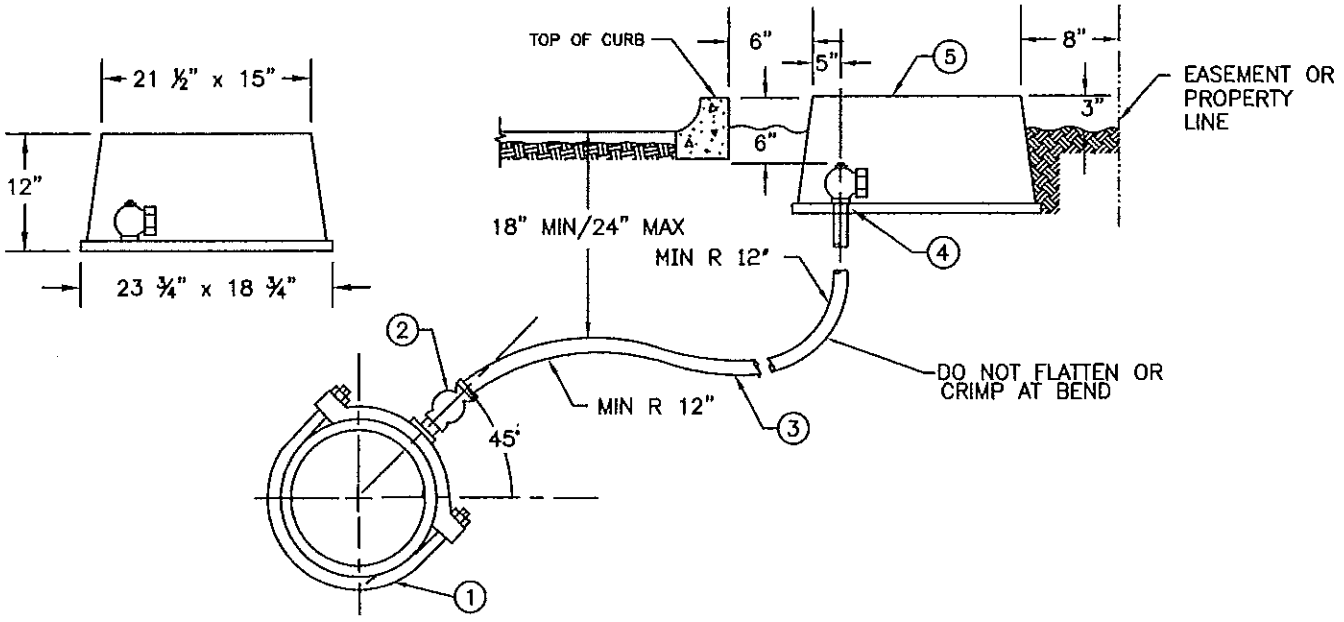

CONNECTION TO DIP

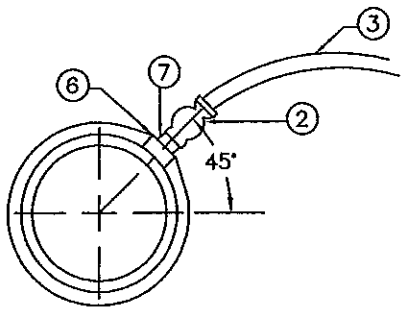

CONNECTION
TO STEEL PIPE

NOTES:

1. WHERE STREETS ARE IMPROVED, METER BOXES SHALL BE LOCATED BEHIND CURB, BERM, & SIDEWALK. IN SOME CASES, LOCATE METER BOX 8" FROM PROPERTY OR EASEMENT LINE.
2. SET BOXES BEHIND CURB OR SIDEWALK, IN PARKWAY, BEHIND CURB.
3. SERVICES SHALL NOT BE PLACED IN DRIVEWAYS, CURB RETURNS, OR SIDEWALKS.
4. COUPLINGS OR UNIONS WILL NOT BE PERMITTED UNDER CONCRETE.
5. BRONZE SADDLES & DIP CONNECTIONS, SHALL BE COATED ACCORDING TO AWWA C-203-78.
6. SERVICES SHALL BE SLEEVED WITH CLEAR 6 MIL POLYWRAP.

ITEM NO.	MATERIAL SPECIFICATIONS*
1.	DOUBLE STRAP BRONZE SADDLE, IPT
2.	BRASS BALL CORP. (GRIP RING)
3.	1" COPPER TUBING (TYPE "K" SOFT)
4.	1" GRIP RING BALL ANGLE METER STOP WITH LOCKWINGS
5.	PLASTIC METER BOX WITH TWO PIECE READING LID
6.	1-1/4", SCH 80 HIGH PRESSURE FORGED STEEL WELD COUPLING,
7.	1-1/4" x 1" NYLON HEX BUSHING (MAROON IN COLOR)

ALL MATERIALS SHALL BE DISTRICT APPROVED

RINCON DEL DIABLO MUNICIPAL WATER DISTRICT

CHECKED BY	DATE	1-INCH WATER SERVICE (5/8" & 1" METERS)	DRAWING NO.
APPROVED BY	DATE		W-3

PROVIDED AS A COURTESY BY:
PACIFIC
PIPELINE SUPPLY

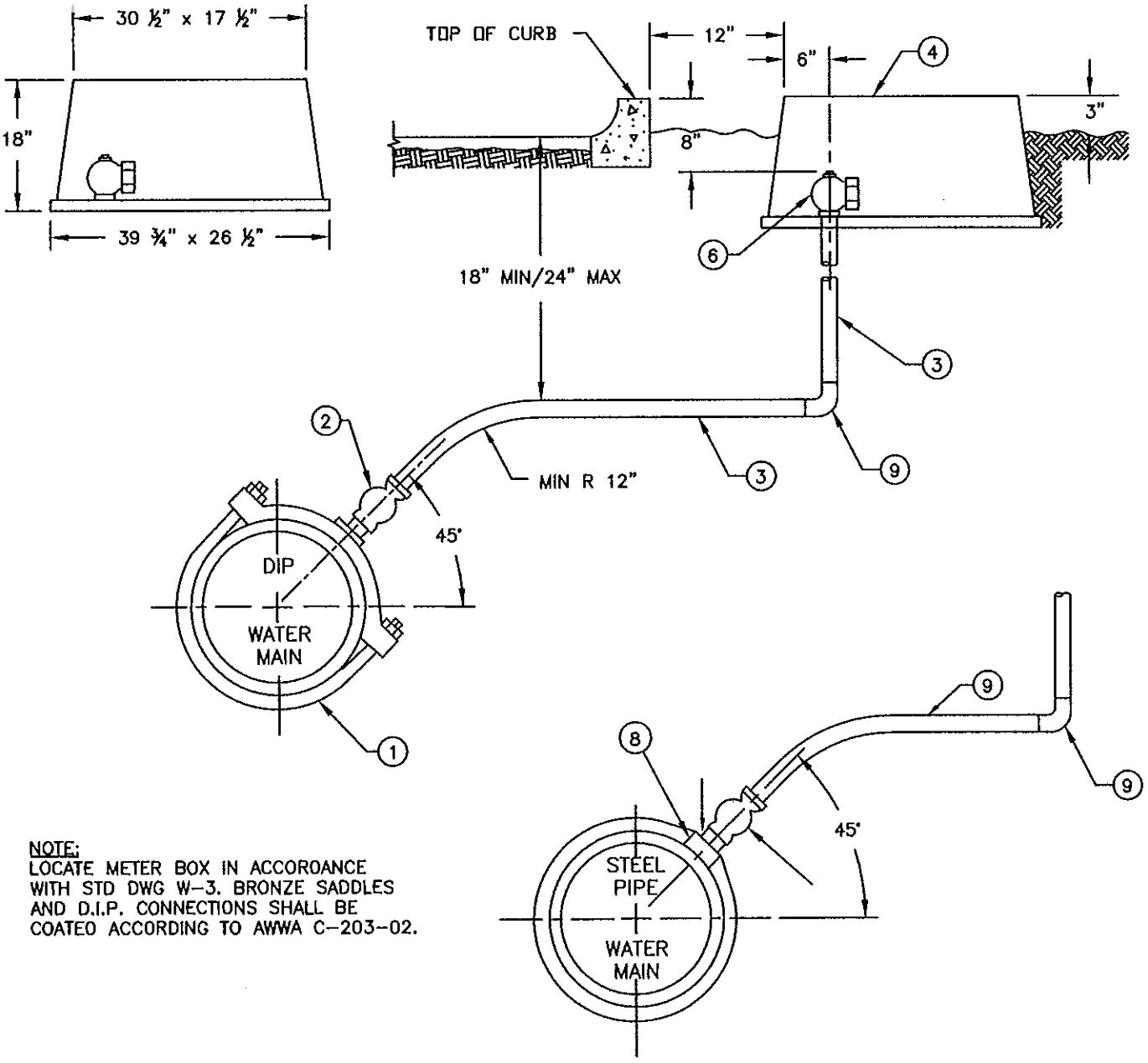

NOTE:
LOCATE METER BOX IN ACCOROANCE WITH STD DWG W-3. BRONZE SADDLES AND D.I.P. CONNECTIONS SHALL BE COATED ACCORDING TO AWWA C-203-02.

ITEM NO.	MATERIAL SPECIFICATIONS*
1.	DOUBLE STRAP IPT BRONZE SADDLE
2.	2" GRIP RING BALL CORP
3.	2" COPPER TUBING (TYPE "K" SOFT)
4.	PLASTIC METER BOX WITH TWO PIECE READING LID
5.	2-1/2" SCH 80 HIGH PRESSURE FORGED STEEL WELD COUPLING
6.	2" GRIP RING BALL ANGLE METER STOP WITH LOCKWINGS
7.	2" GRIP RING 90 DEGREE ELBOW
8.	2-1/2" X 2" NYLON HEX BUSHING (-MAROON IN COLOR)
9.	2" GRIP RING 90° ELBOW

ALL MATERIALS SHALL BE DISTRICT APPROVED

RINCON DEL DIABLO MUNICIPAL WATER DISTRICT

CHECKED BY	DATE	2-INCH WATER SERVICE (1-1/2" & 2" METERS)	DRAWING NO.
APPROVED BY	DATE		W-4

PROVIDED AS A COURTESY BY:
PACIFIC PIPELINE SUPPLY

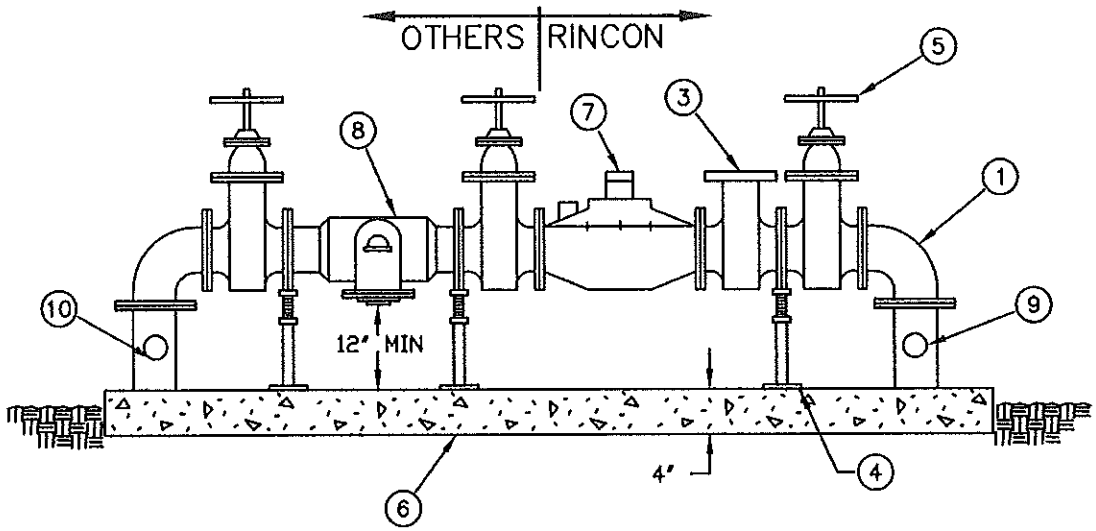

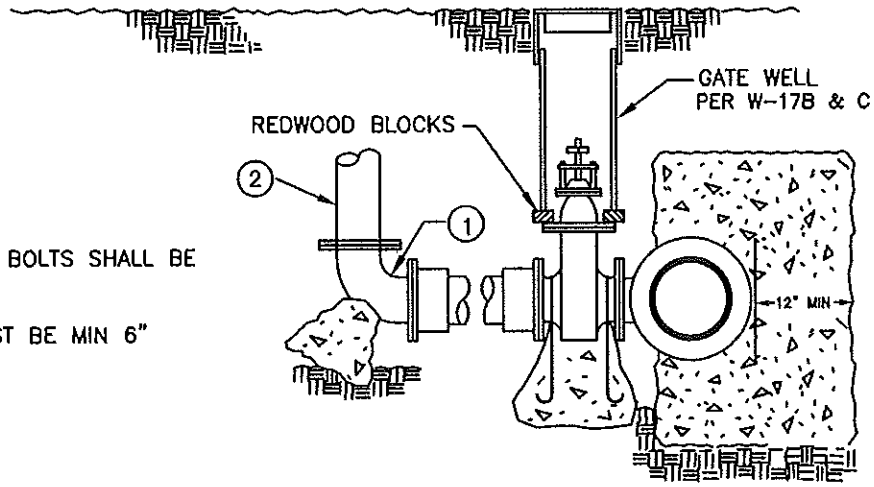

THRUST BLOCKS PER W-18 & W-19

NOTE:

1. ALL EXPOSED PIPING AND BOLTS SHALL BE PRIMED AND PAINTED.
2. TAP AND GATE VALVE MUST BE MIN 6"

ITEM NO.	MATERIAL SPECIFICATIONS*
1.	DUCTILE IRON FLANGED 90°.
2.	FLANGED DIP OR CML&C SPOOL.
3.	STRAINER
4.	ADJUSTABLE SUPPORT WITH FLANGE CONNECTION
5.	RW GATE VALVE WITH HANDWHEEL.
6.	CEMENT SPLASH 4" WIDE x 2' LONGER THAN SERVICE INSTALLATION
7.	METER INSTALLATION
8.	RPP BACKFLOW DEVICE
9.	TEST PLUG (IF NOT SUPPLIED IN METER BODY), SPOOL WITH 2" TAP SHALL BE INSTALLED
10.	SPOOL WITH 2" TEST TAP, 2" BALL CORP AND 2 1/2" FIRE HOSE ADAPTOR.

ALL MATERIALS SHALL BE DISTRICT APPROVED

RINCON DEL DIABLO MUNICIPAL WATER DISTRICT

CHECKED BY	DATE	3-INCH METER & LARGER	DRAWING NO.
APPROVED BY	DATE		W-5

PROVIDED AS A COURTESY BY:
PACIFIC
PIPELINE SUPPLY

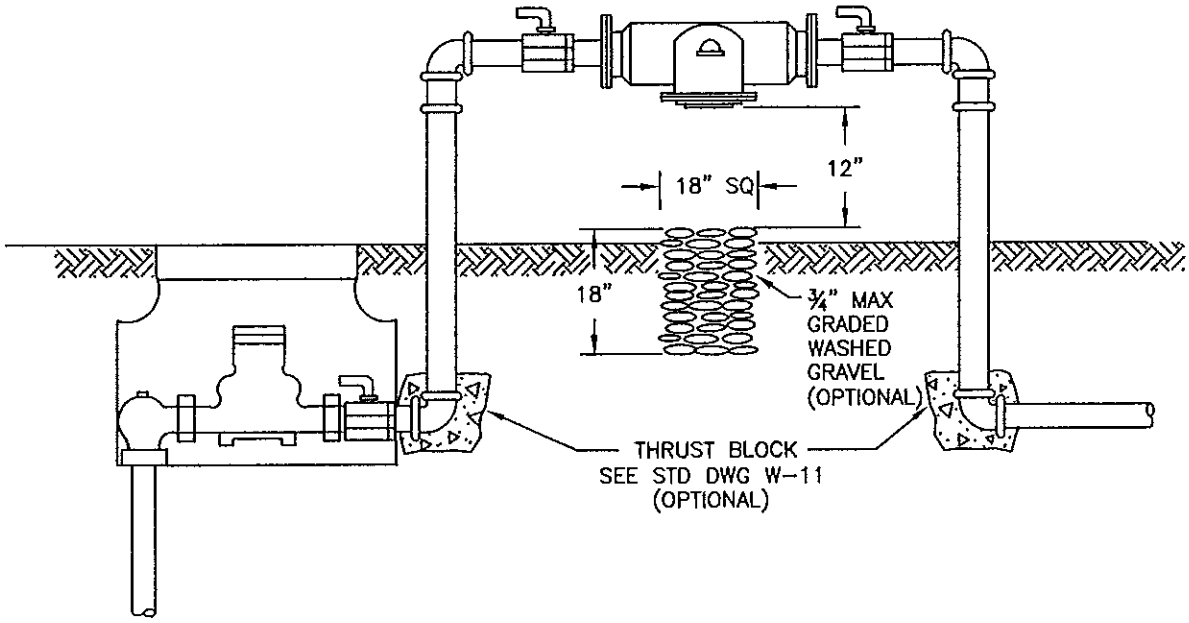

NOTES:

1. NO WATER CONNECTIONS TO BE MADE BETWEEN METER AND BACKFLOW DEVICE FOR ANY REASON.
2. LOCATION OF BACKFLOW PREVENTER WILL BE DETERMINED BY THE DISTRICT.
3. ALL DEVICES SHALL BE STATE HEALTH DEPARTMENT AND USC APPROVED.
4. SEE SPECIFICATIONS FOR TYPE OF BACKFLOW PREVENTER. SEC. 3, PAR. 3-11
5. BACKFLOW PREVENTER SHALL NOT BE INSTALLED BELOW GRADE.
6. SPECIFIC INSTALLATION SHALL BE SUBMITTED TO DISTRICT FOR APPROVAL.

RINCON DEL DIABLO MUNICIPAL WATER DISTRICT

CHECKED BY	DATE	BACKFLOW PREVENTER	DRAWING NO.
APPROVED BY	DATE		W-6

PROVIDED AS A COURTESY BY:
PACIFIC PIPELINE SUPPLY

1. WIDTH OF SLAB SHALL BE 8" ON EITHER SIDE OF THE DETECTOR CHECK.
2. PROTECTION MAY BE REQUIRED AS PER W-25.
3. ALL PARTS ABOVE GROUND SHALL BE PAINTED.
4. THE VALVE AT THE MAIN SHALL BE THE SAME SIZE AS THE OUTLET OF THE TEE

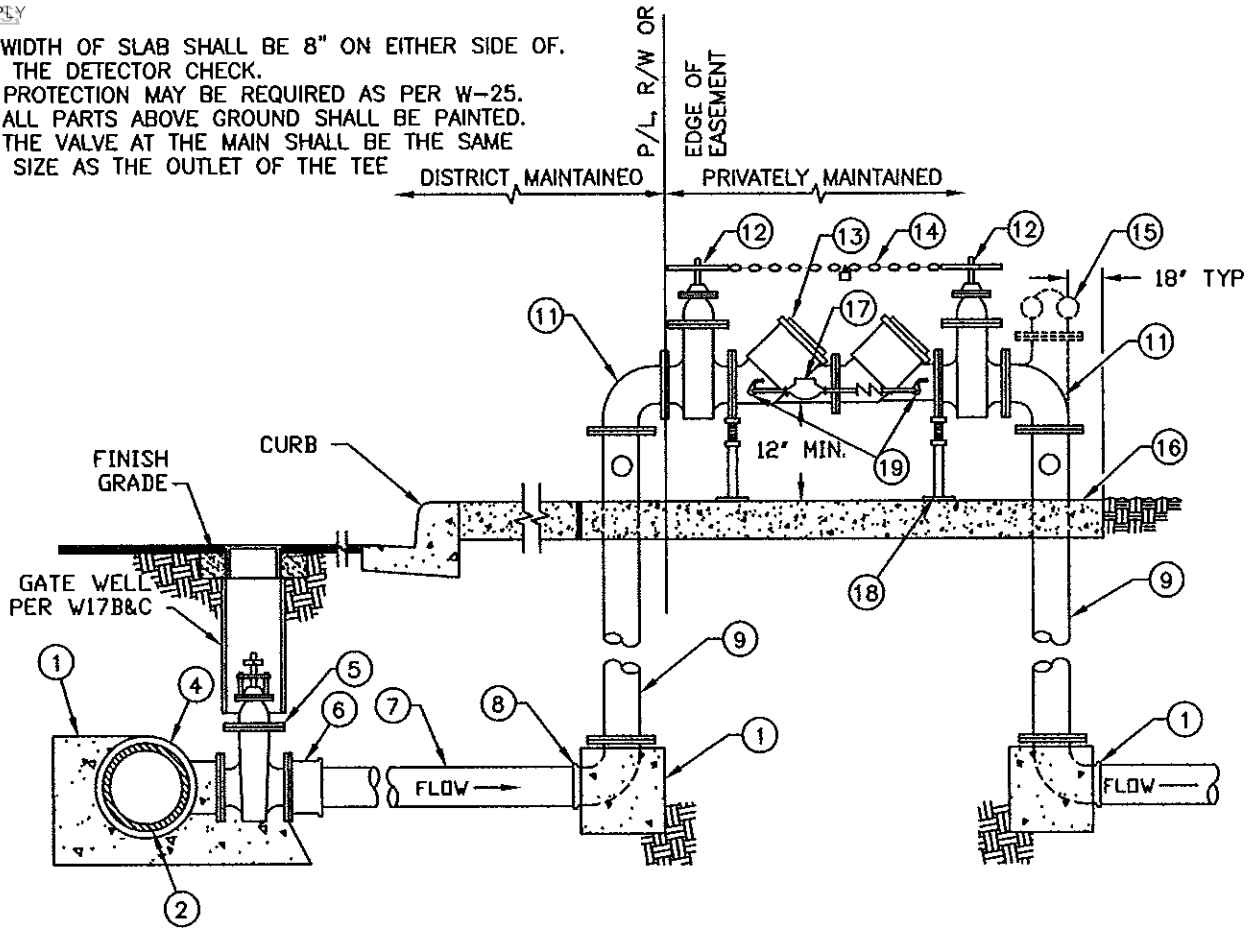

ITEM NO.	MATERIAL SPECIFICATIONS*
1.	CONCRETE THRUST BLOCK (SEE W-18)
2.	WATER MAIN
3.	GATE VALVE CAN (SEE W-17A & B)
4.	MJ/PO/FLG x FLG TEE
5.	8" FLANGE x FLANGE RW GATE VALVE
6.	8" FLANGE x MJ/PO ADAPTER
7.	8" DUCTILE IRON PIPE
8.	MJ/PO x FLG ELBOW
9.	FLANGED DUCTILE IRON PIPE
10.	EXPANSION JOINT
11.	FLANGED ELBOW
12.	FLANGED OS&Y RWGV WITH HAND WHEEL
13.	RPDA
14.	CHAIN WITH KNOX LOCK
15.	FLANGED TEE WITH "FDC"
16.	CONCRETE SPLASH PAD 8" THICK x 36" WIDTH x AS REQUIRED LENGTH
17.	BYPASS METER (READ IN GALLONS) W/RP DEVICE
18.	ADJUSTABLE VALVE SUPPORT
19.	BALL VALVES LOCKABLE IN OPEN POSITION

ALL MATERIALS SHALL BE DISTRICT APPROVED

RINCON DEL DIABLO MUNICIPAL WATER DISTRICT

CHECKED BY	DATE	FIRE DETECTOR R.P.D.A. ASSEMBLY	DRAWING NO.
APPROVED BY	DATE		W-7A

PROVIDED AS A COURTESY BY:
PACIFIC
PIPELINE SUPPLY

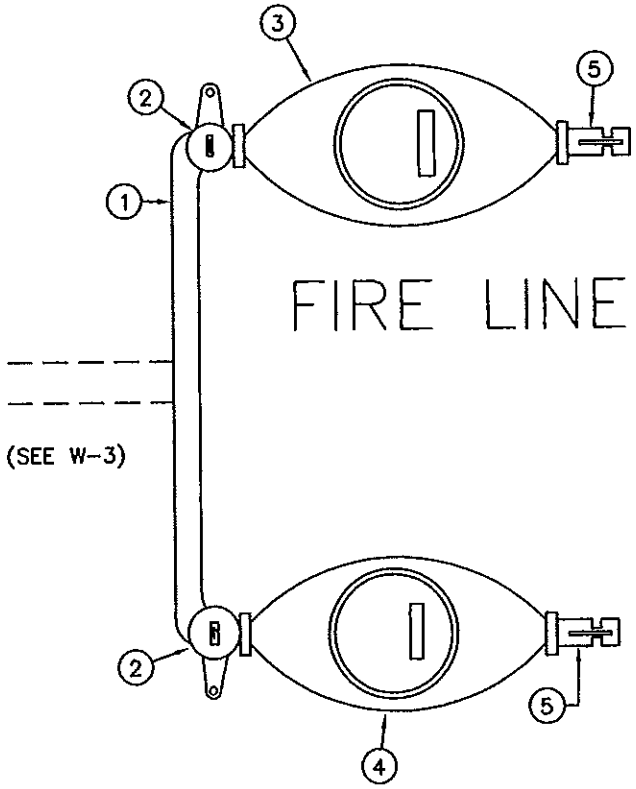

NOTES:
1. AN APPROVED BACKFLOW PREVENTER WILL BE REQUIRED ON THE FIRE LINE.

ITEM NO.	MATERIAL SPECIFICATIONS*
1.	BRANCH CONNECTION
2.	1" DOUBLE WING ANGLE METER STOP (LOCK IN OPEN POSITION)
3.	1" METER (FIRE LINE)
4.	5/8" OR 1" METER
5.	BRONZE BALL VALVE

ALL MATERIALS SHALL BE DISTRICT APPROVED

RINCON DEL DIABLO MUNICIPAL WATER DISTRICT

CHECKED BY	DATE	FIRE SPRINKLER SYSTEM (1" METER)	DRAWING NO.
APPROVED BY	DATE		W-7B

PROVIDED AS A COURTESY BY:
PACIFIC
PIPELINE SUPPLY

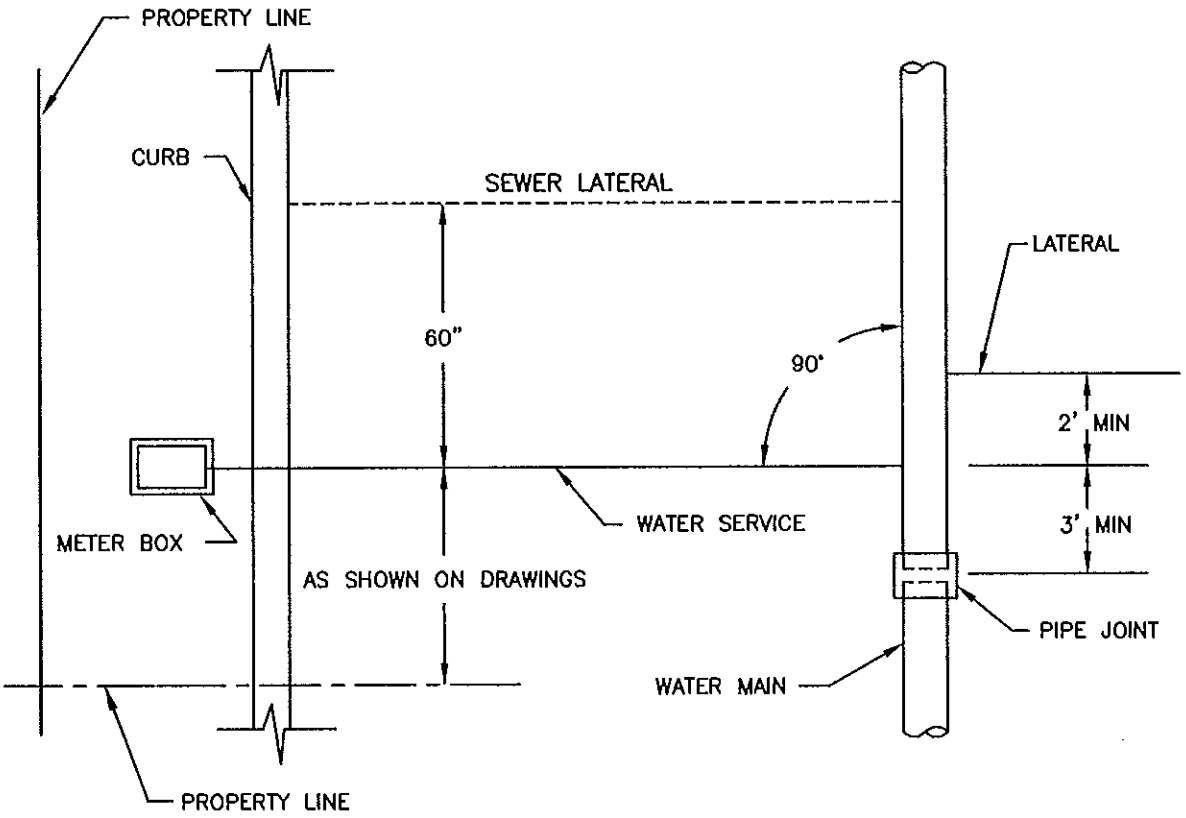

NOTES:

1. WHERE THERE ARE NO CURBS, THE LOCATION OF THE METER BOX SHALL BE DETERMINED BY THE DISTRICT.
2. NO LATERAL SHALL BE INSTALLED IN DRIVEWAY AREAS CURBS OR SIDEWALKS.

RINCON DEL DIABLO MUNICIPAL WATER DISTRICT

CHECKED BY	DATE	LATERAL LOCATION	DRAWING NO.
APPROVED BY	DATE		W-8

PROVIDED AS A COURTESY BY:
PACIFIC
PIPELINE SUPPLY

NOTES:

1. IF CONCRETE CURBS OR BERMS ARE NOT INSTALLED, LOCATE AV 24" FROM PROPERTY OR EASEMENT LINE.
2. WHERE STREETS ARE IMPROVED WITH EITHER CONCRETE CURB OR BERM, LOCATE AV 36" FROM CURB, BERM OR SIDEWALK.

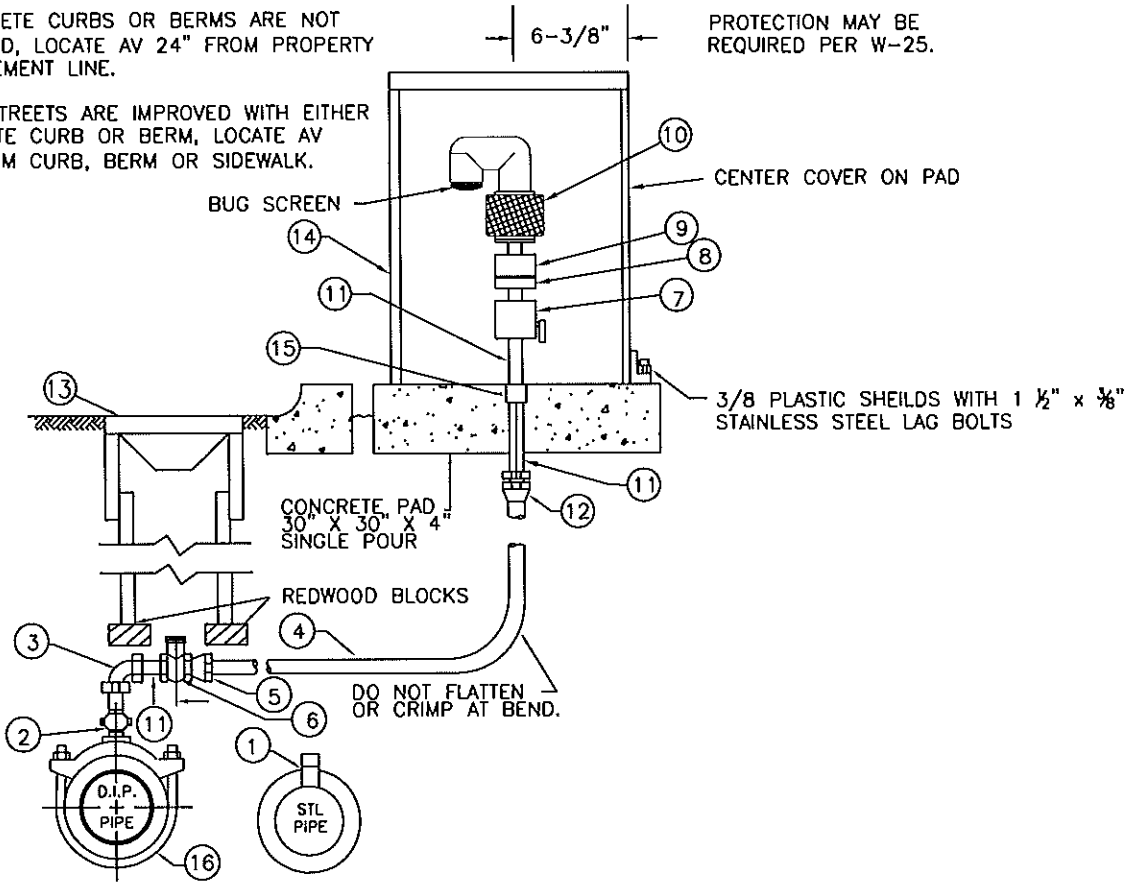

ITEM NO.	MATERIAL SPECIFICATIONS*
1.	1-1/4" HIGH PRESSURE STEEL WELD COUPLING
2.	1" MIPT BRONZE BALL CORPORATION STOP
3.	1" FIPT BRONZE 90 DEGREE ELBOW
4.	1" COPPER TUBING
5.	1" MIPT X GRIP RING ADAPTOR
6.	1" BALL VALVE WITH OPERATING NUT
7.	1" FIPT X MIPT BALL VALVE WITH T-HANDLE
8.	1" FIPT X 2" MIPT PVC BUSHING
9.	2" PVC THREAD X THREAD COUPLING
10.	2" COMBINATION AIR & VACUUM RELEASE VALVE WITH BUG SCREEN (ARI D-040)
11.	RED BRASS NIPPLE 1" X 8"
12.	1" FIPT x GRIP RING ADAPTOR
13.	8" CAST IRON WATER GATE WELL LID (MIN 6" SKIRT) PAINTED HI-VIS YELLOW
14.	AIR VAC ASSEMBLY COVER PER W-98
15.	1" BRASS COUPLING
16.	DOUBLE STRAP BRONZE SADDLE

ALL MATERIALS SHALL BE DISTRICT APPROVED

RINCON DEL DIABLO MUNICIPAL WATER DISTRICT

CHECKED BY	DATE	1-INCH COMBINATION AIR & VACUUM ASSEMBLY	DRAWING NO.
APPROVED BY	DATE		W-9A

PROVIDED AS A COURTESY BY:
PACIFIC
PIPELINE SUPPLY

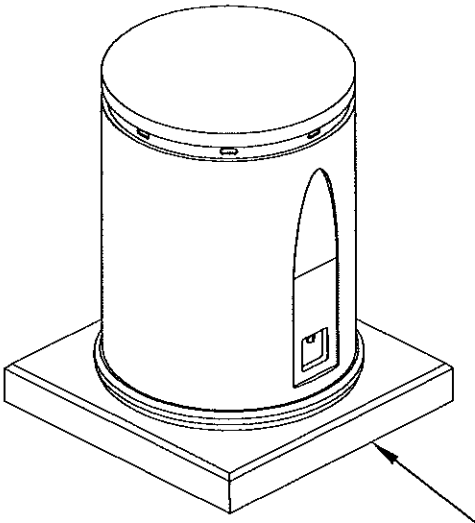

30" x 30" X 4"
CONCRETE PAD

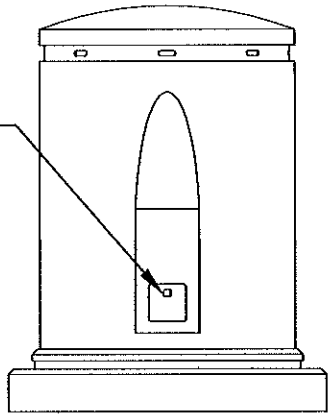

STAINLESS STEEL
PADLOCK BACKING
PLATE

FRONT VIEW

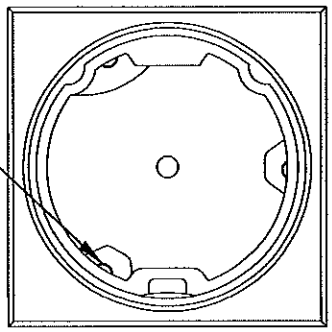

3/8" PLASTIC SHEILDS
W/1-1/2" X 3/8"
STAINLESS STEEL LAG BOLTS

TOP VIEW

NOTES:
1. 18" DIA. x 30" TALL VALVE ENCLOSURE. ENCLOSURE TO HAVE A BOLT DOWN BASE WITH REMOVEABLE COVER. COVER & BASE TO BE MANUFACTURED FROM 3/16" WALL POLYETHYLENE WITH UV STABILIZERS. COVER SHALL LOCK TO BASE WITH INTEGRAL AUTO-LATCH AND PADLOCK HASP. COVER TO BE PIPELINE PRODUCTS' MODEL #VCAS-1830 OR APPROVED EQUAL.

2. COLOR SHALL BE DETERMINED BY THE DISTRICT.

ALL MATERIALS SHALL BE DISTRICT APPROVED

RINCON DEL DIABLO MUNICIPAL WATER DISTRICT

CHECKED BY	DATE	POLYETHYLENE AIR & VACUUM ASSEMBLY COVER	DRAWING NO.
APPROVED BY	DATE		W-9B

PROVIDED AS A COURTESY BY:
PACIFIC PIPELINE SUPPLY

PROTECTION MAY BE REQUIRED PER W-25.

NOTES:

1. IF CONCRETE CURBS OR BERMS ARE NOT INSTALLED, LOCATE AV 24" FROM PROPERTY OR EASEMENT LINE.
2. WHERE STREETS ARE IMPROVED WITH EITHER CONCRETE CURB OR BERM, LOCATE AV 36" FROM CURB, BERM OR SIDEWALK.

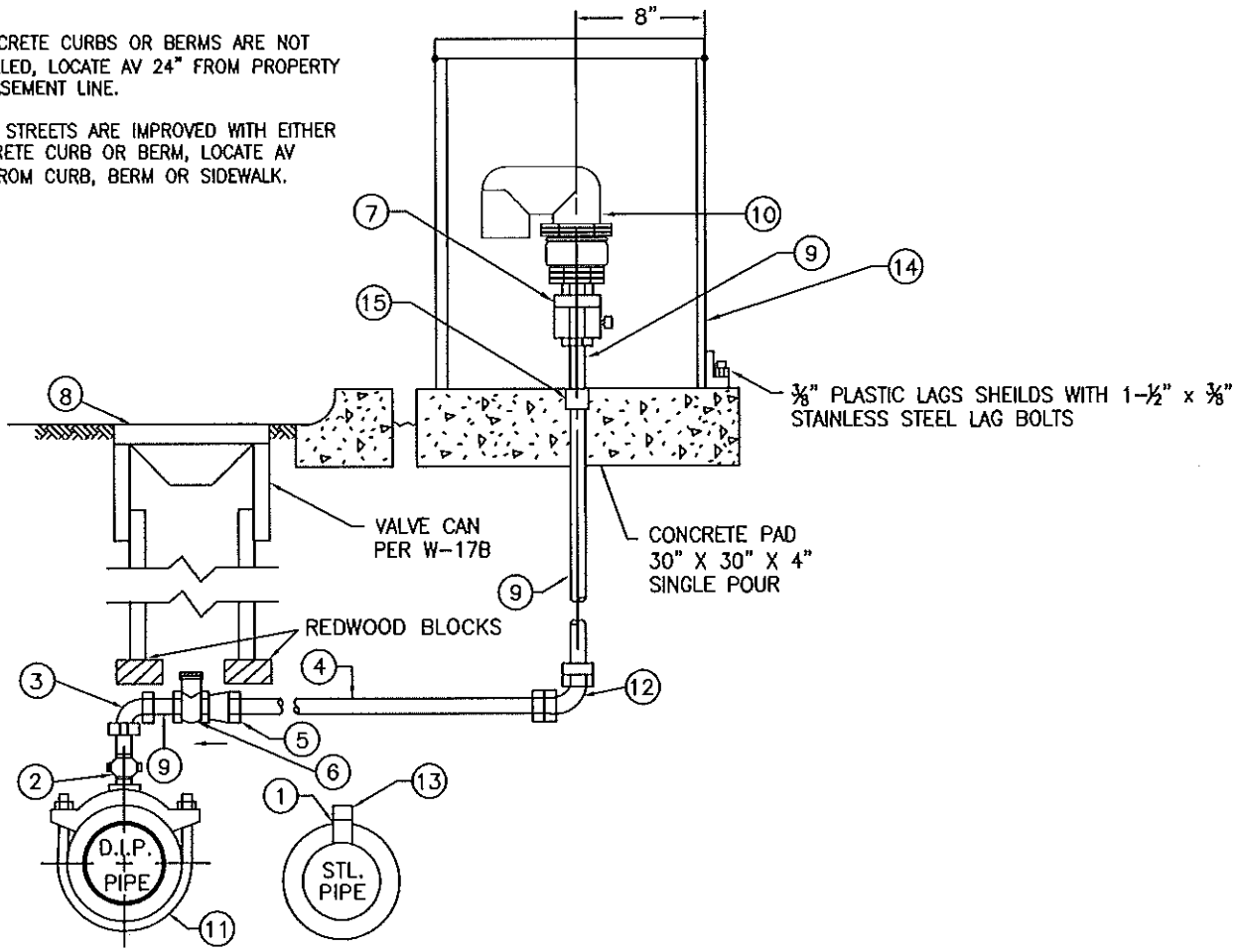

ITEM NO.	MATERIAL SPECIFICATION*
1.	2-1/2" HIGH PRESSURE STEEL WELD COUPLING
2.	2" MIPT BRONZE BALL CORPORATION STOP
3.	2" FIPT BRONZE 90 DEGREE ELBOW
4.	2" COPPER TUBING
5.	2" MIPT X GRIP RING ADAPTOR
6.	2" BALL VALVE WITH OPERATING NUT
7.	2" BALL VALVE WITH T-HANDLE
8.	8" GATE WELL (PER W-17 B)
9.	2" RED BRASS NIPPLE
10.	2" COMBINATION AIR & VACUUM RELEASE VALVE (ARI D-040)
11.	DOUBLE STRAP BRONZE SADDLE
12.	2" FIPT x GRIP RING ADAPTOR
13.	2-1/2" X 1" NYLON HEX BUSHING (MAROON IN COLOR)
14.	AIR VAC ASSEMBLY COVER PER W-9B
15.	2" BRASS COUPLING

* ALL MATERIALS SHALL BE DISTRICT APPROVED*

RINCON DEL DIABLO MUNICIPAL WATER DISTRICT

CHECKED BY	DATE	2-INCH COMBINATION AIR & VACUUM ASSEMBLY	DRAWING NO.
APPROVED BY	DATE		W-10

PROVIDED AS A COURTESY BY:
PACIFIC
PIPELINE SUPPLY

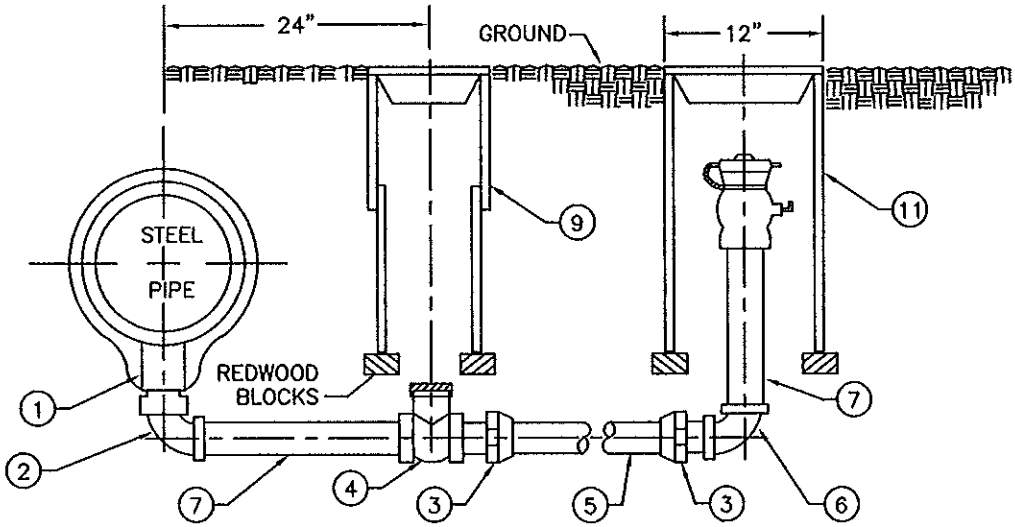

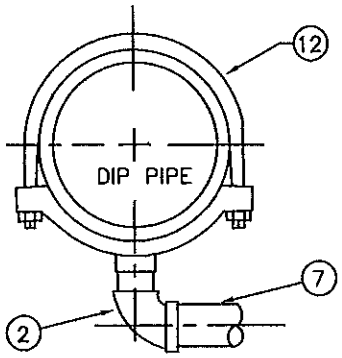

ITEM NO.	MATERIAL SPECIFICATIONS*
1.	2–½" HIGH PRESSURE STEEL WELD COUPLING WITH 2–½" x 2" NYLON HEX BUSHING (MAROON IN COLOR)
2.	2" BRONZE 90 DEGREE STREET ELL
3.	2" MIPT X GRIP RING ADAPTOR
4.	2" BALL VALVE WITH OPERATING NUT
5.	2" COPPER TUBING (MIN LENGTH 24")
6.	2" BRONZE GRIP RING x FIPT 90 DEGREE ELBOW
7.	2" REQUIRED LENGTH RED BRASS NIPPLE
8.	2" MIPT X 2–½" FIRE HOSE THREAD BRASS ADAPTOR WITH 2–½" PVC CAP
9.	8" GATE WELL (PER W–17B & C)
10.	2" BALL VALVE (HANDLE TURNED UP FOR OPERATION)
11.	12" x 20" EPOXY COATED STEEL PIPE
12.	DOUBLE STRAP BRONZE SADDLE

* ALL MATERIALS SHALL BE DISTRICT APPROVED*

RINCON DEL DIABLO MUNICIPAL WATER DISTRICT

CHECKED BY	DATE	2–INCH BLOW OFF ASSEMBLY	DRAWING NO.
APPROVED BY	DATE		W–11

PROVIDED AS A COURTESY BY:
PACIFIC
PIPELINE SUPPLY

NOTES:

1. WHERE STREETS ARE IMPROVED WITH EITHER CONCRETE CURB OR BERM, LOCATE BLOWOFF 36" FROM CURB OR BERM.
2. FOR THRUST BLOCKS, SEE STANDARD DRAWINGS W-18 & W-19.
3. ALL FLANGE FITTINGS SHALL BE BONDED AS PER THE CORROSION CONTROL SPECS

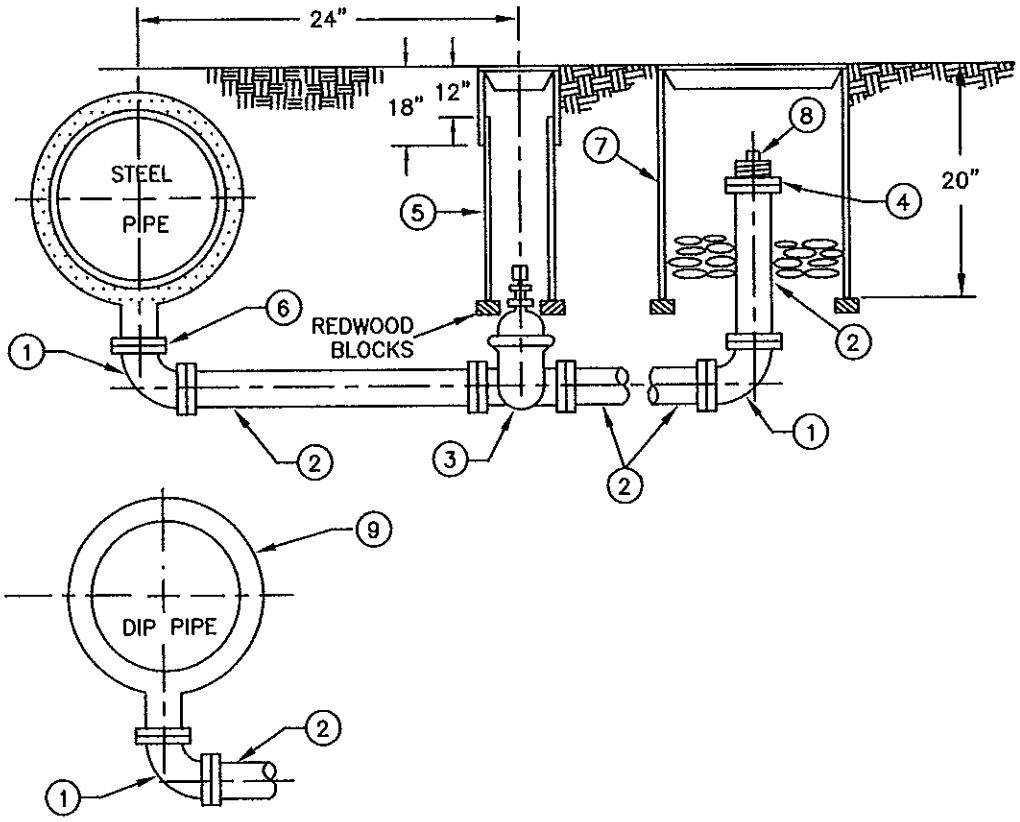

ITEM NO.	MATERIAL SPECIFICATIONS*
1.	4" 90 DEGREE CAST IRON FLANGE x FLANGE ELBOW
2.	4" FLANGED CML&C OR DIP PIPE
3.	FLANGE x FLANGE RW GATE VALVE WITH OPERATING NUT
4.	4" X 4" THREADED FLANGE
5.	8" GATE WELL (PER W-17B & C)
6.	4" WELDED FLANGED SPIGOT
7.	12" x 20" DIP TUBING WITH 12" WATER VALVE CAN LID-EPOXY COATED
8.	4" D.W.V. PVC THREADED PLUG
9.	DUCTILE IRON TEE WITH 4" FLANGED OUTLET

* All MATERIALS SHALL BE DISTRICT APPROVED*

RINCON DEL DIABLO MUNICIPAL WATER DISTRICT

CHECKED BY	DATE	4-INCH (AND LARGER) BLOW OFF ASSEMBLY	DRAWING NO.
APPROVED BY	DATE		W-12

PROVIDED AS A COURTESY BY:
PACIFIC
PIPELINE SUPPLY

THIS PAGE INTENTIONALLY LEFT BLANK

RINCON DEL DIABLO MUNICIPAL WATER DISTRICT

CHECKED BY	DATE		DRAWING NO.
APPROVED BY	DATE		W-13

PROVIDED AS A COURTESY BY:
PACIFIC PIPELINE SUPPLY

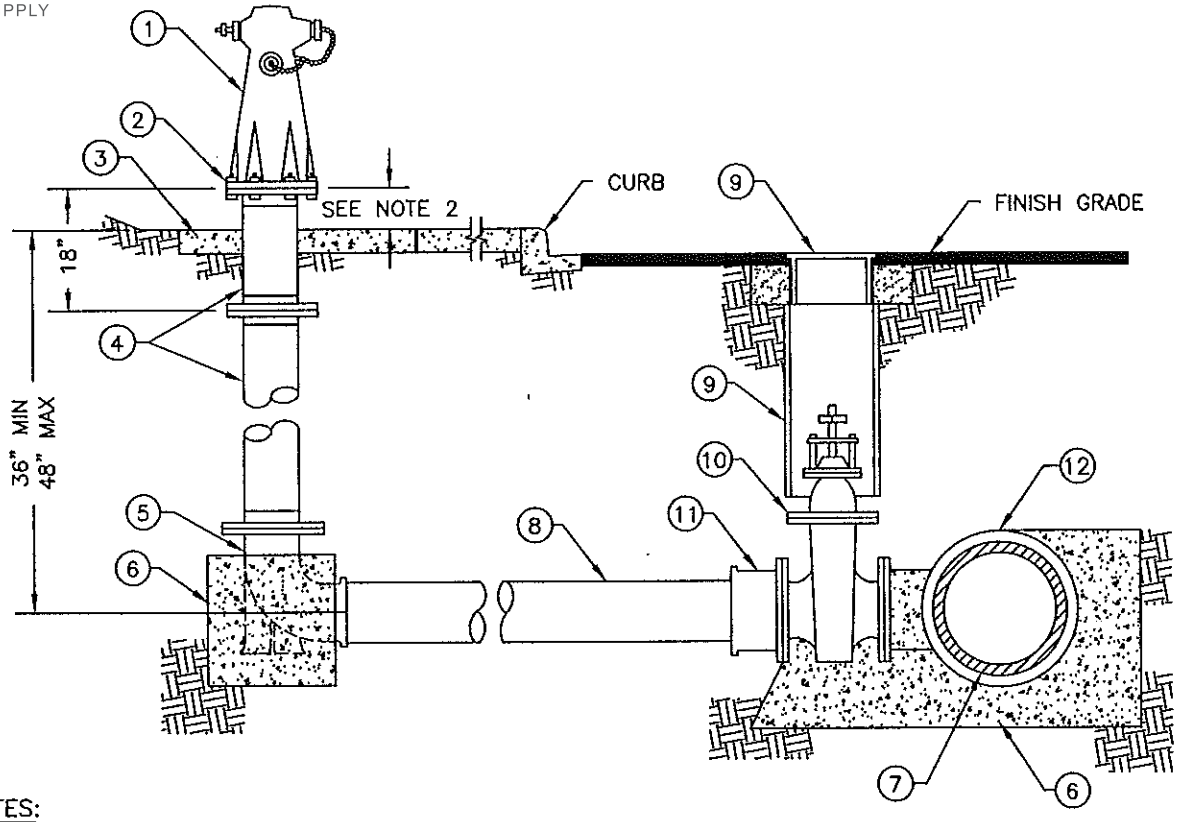

NOTES:

1. THE NUMBER AND SIZE OF OUTLETS SHALL BE AS SHOWN ON PLANS FOR COMMERICAL/RESIDENTIAL F/H
2. FIRE HYDRANT FLANGE SHALL BE 4" TO 6" ABOVE TOP OF CURB OR SPLASH PAD SEE PLANS FOR ELEVATION
3. LOCATE FIRE HYDRANT AS SHOWN ON PLANS.
4. SEE W-14B FOR TRAFFIC CONTROL OR EROSION CONTROL.
5. MATERIALS SHALL BE SELECTED FROM THE APPROVED MATERIALS LIST.

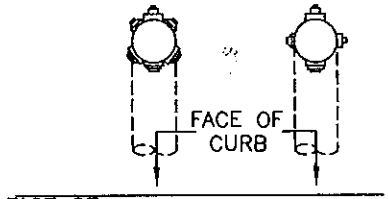

FIRE HYDRANT PORT ORIENTATION INSTALLATION

ITEM NO.	MATERIAL SPECIFICATIONS*
1.	6" BRASS FIRE HYDRANT
2.	¾" X 3" CADMIUM BOLTS & NUTS
3.	30' x 30" x 8" CONCRETE SPLASH PAD
4.	6" FLANGED DI DOUBLE GROOVED SPOOLS
5.	6" X 16" LONG RADIUS FLG X MJ/PO BURY ELL
6.	CONCRETE THRUST BLOCK (SEE W-18)
7.	WATER MAIN
8.	6" DUCTILE IRON PIPE/CML&C
9.	8" GATE WELL (SEE W-17B & C)
10.	6" FLG x FLG RWGV
11.	6" FLG x MJ/PO ADAPTER (IF REQUIRED)
12.	SIZE x 6" MJ/PO/FLG x FLG TEE OR EPOXY COATED TAPPING TEE AS REQUIRED

ALL MATERIALS SHALL BE DISTRICT APPROVED

RINCON DEL DIABLO MUNICIPAL WATER DISTRICT

CHECKED BY	DATE	6-INCH FIRE HYDRANT ASSEMBLY	DRAWING NO.
APPROVED BY	DATE		W-14A

PROVIDED AS A COURTESY BY:
PACIFIC
PIPELINE SUPPLY

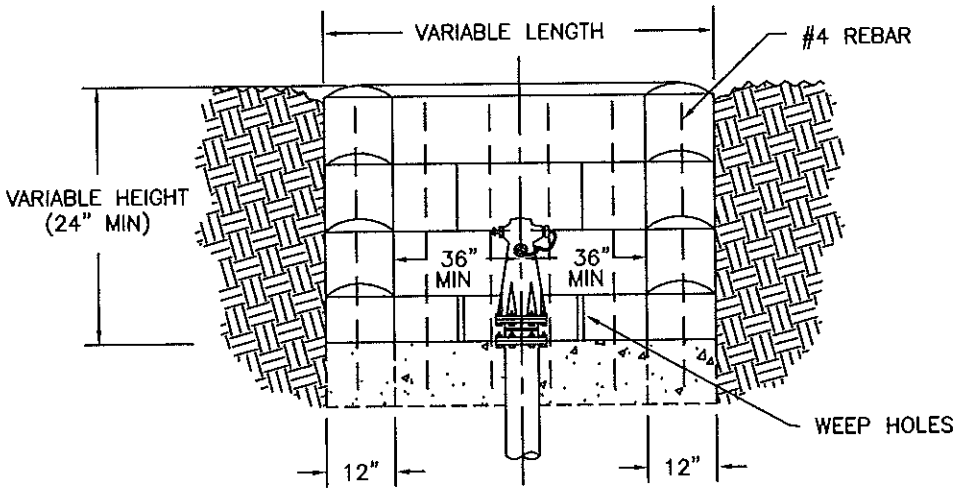

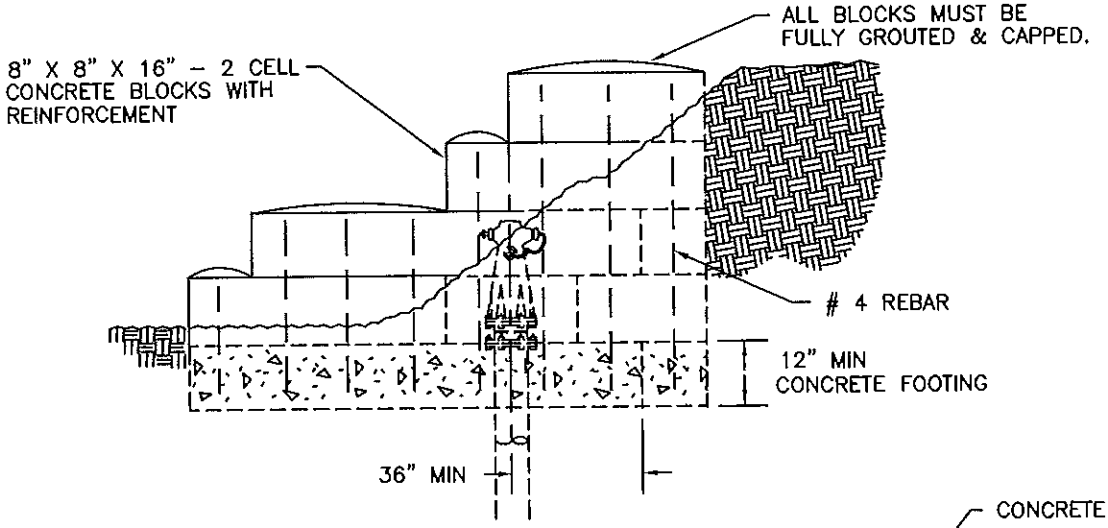

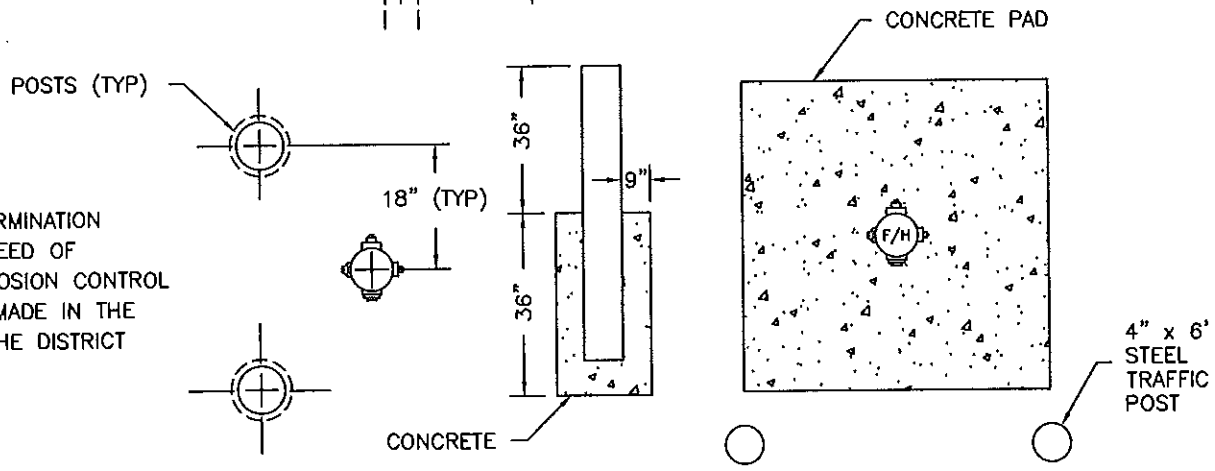

FINAL DETERMINATION FOR THE NEED OF TRAFFIC/EROSION CONTROL SHALL BE MADE IN THE FIELD BY THE DISTRICT INSPECTOR.

RINCON DEL DIABLO MUNICIPAL WATER DISTRICT

CHECKED BY	DATE	RETAINING WALL & TRAFFIC CONTROL	DRAWING NO.
APPROVED BY	DATE		W–14B

PROVIDED AS A COURTESY BY:
PACIFIC
PIPELINE SUPPLY

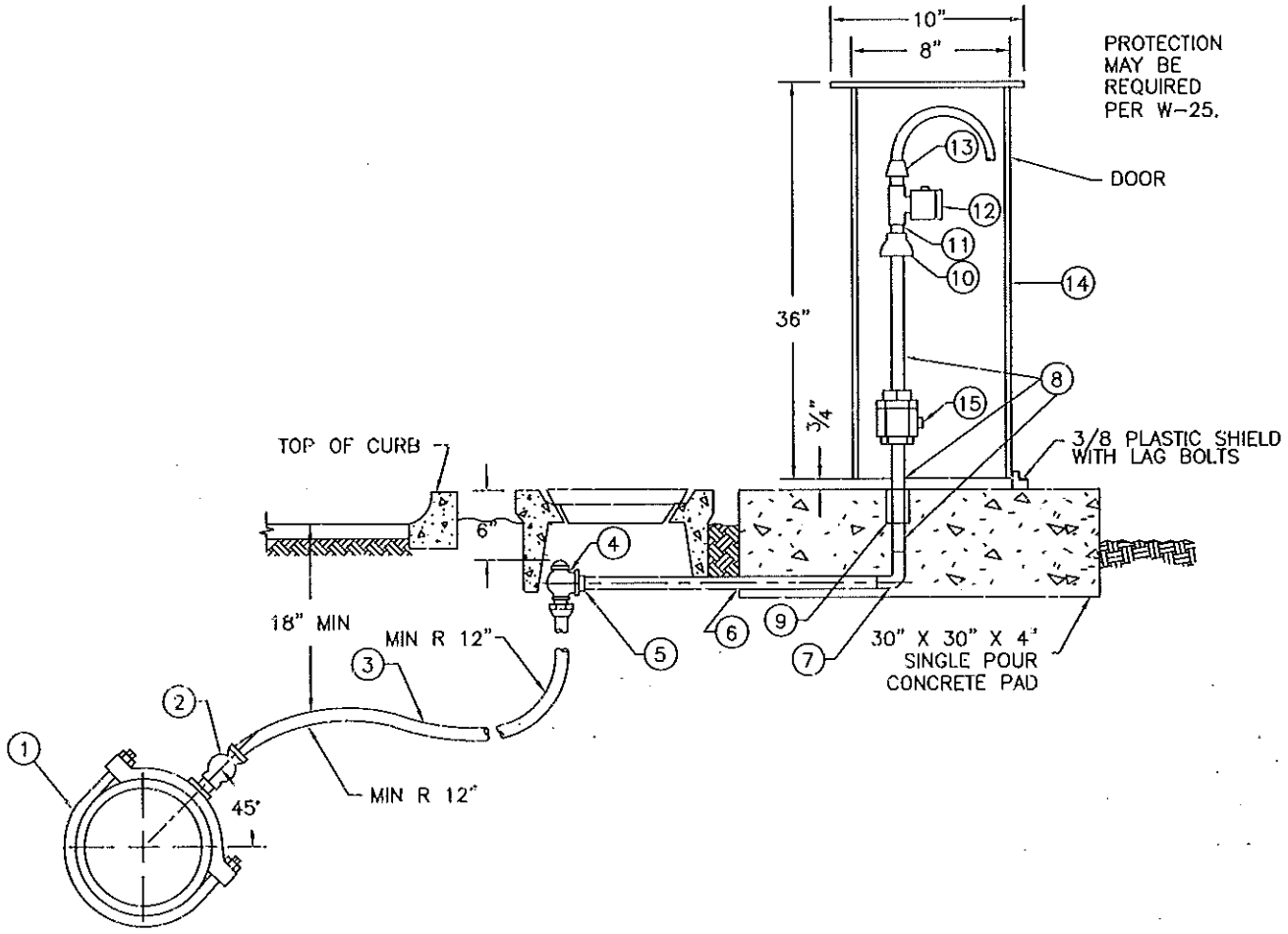

ITEM NO.	MATERIAL SPECIFICATIONS*
1.	BRASS SADDLE OR 1-1/4" WELD COUPLING WITH 1-1/4" x 1" NYLON BUSHING (MAROON IN COLOR)
2.	1" GRIP RING CORPORATION STOP
3.	1" COPPER
4.	1" GRIP RING ANGLE BALL VALVE STOP
5.	1-1/4" MIP x 1" FIP BUSHING
6.	1" BRASS NIPPLE
7.	1" FIP x FIP 90 DEGREE ELBOW
8.	1" BRASS NIPPLE (1"X3" LOWER NIPPLE-UPPER LENGTH MAY VARY)
9.	1" THREADED BRASS COUPLING
10.	1" x 1/2" BELL REDUCER
11.	1/2" x CLOSE NIPPLE
12.	1/2" x FIP TEE WITH 1/2" BALL VALVE
13.	1/2" STAINLESS BALL VALVE AND SPIGOT
14.	SAMPLING STATION COVER (SEE W-15B)
15.	1" BRASS BALL VALVE

ALL MATERIALS SHALL BE DISTRICT APPROVED

RINCON DEL DIABLO MUNICIPAL WATER DISTRICT

CHECKED BY	DATE	WATER SAMPLING STATION	DRAWING NO.
APPROVED BY	DATE		W-15A

PROVIDED AS A COURTESY BY:
PACIFIC
PIPELINE SUPPLY

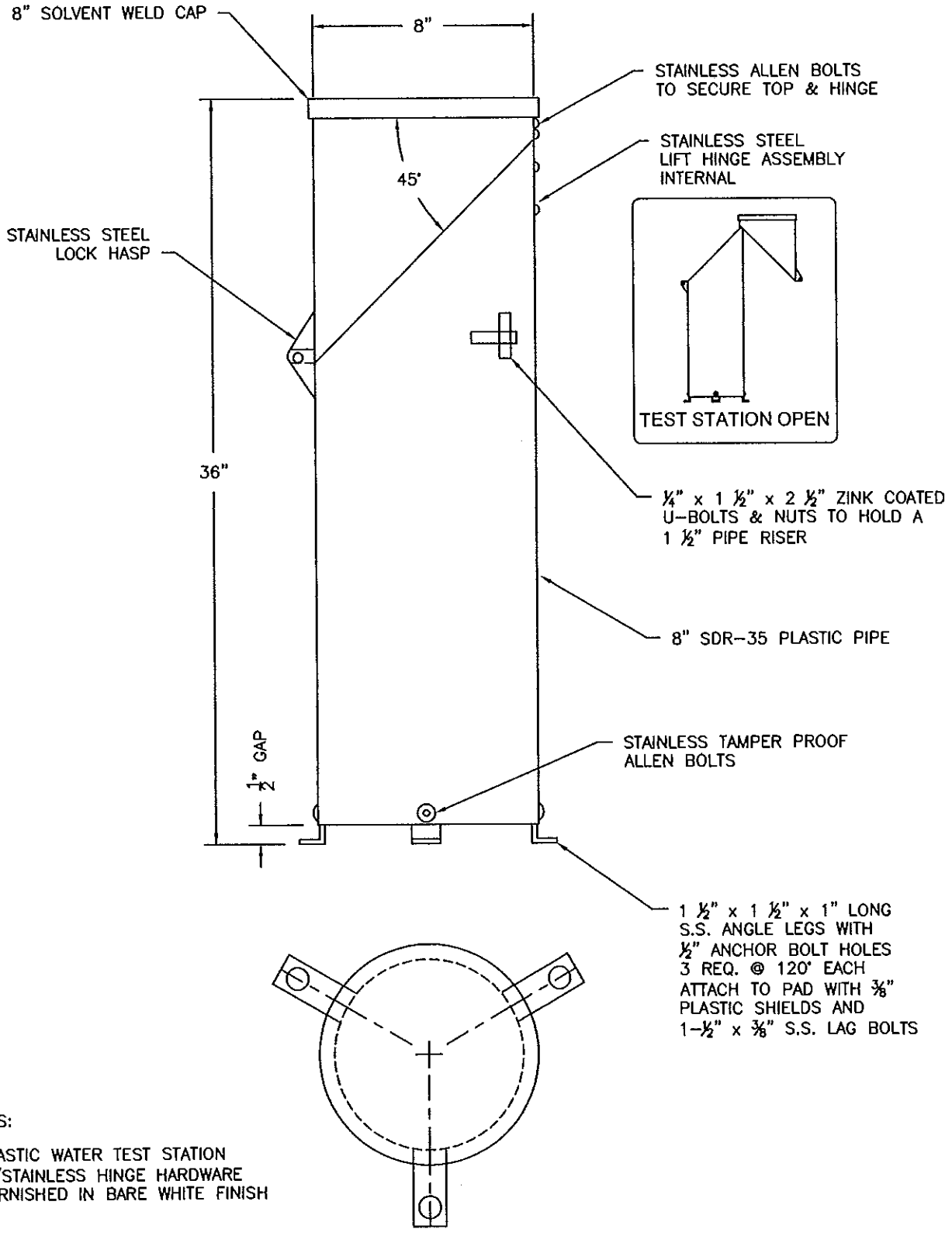

NOTES:

PLASTIC WATER TEST STATION
W/STAINLESS HINGE HARDWARE
FURNISHED IN BARE WHITE FINISH

RINCON DEL DIABLO MUNICIPAL WATER DISTRICT

CHECKED BY	DATE	WATER SAMPLING STATION COVER	DRAWING NO.
APPROVED BY	DATE		W-15B

PROVIDED AS A COURTESY BY:
PACIFIC
PIPELINE SUPPLY

NOTES:

SURFACE RESTORATION IS NOT SHOWN. SUBSURFACE COMPACTION & SURFACE RESTORATION IS TO BE DONE IN ACCORDANCE WITH THE REQUIREMENTS OF THE AFFECTED JURISDICTION. LOCATION & NUMBER OF COMPACTION TESTS WILL BE DETERMINED BY THE DISTRICT, OR APPROPRIATE AGENCY.

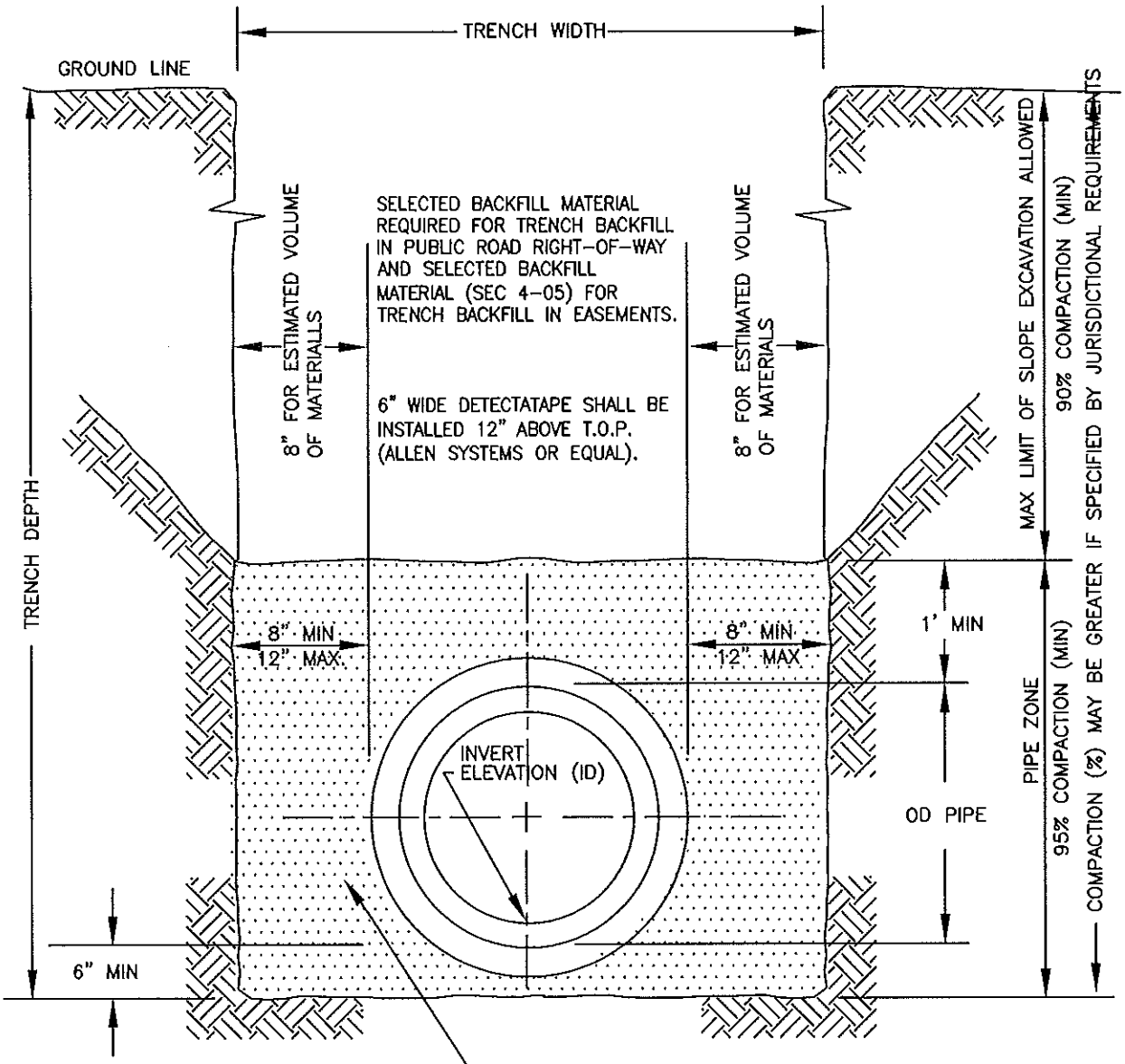

DETECTABLE TAPE REPAIRS

RINCON DEL DIABLO MUNICIPAL WATER DISTRICT

CHECKED BY	DATE	TRENCH EXCAVATION & BACKFILL FOR WATER	DRAWING NO.
APPROVED BY	DATE		W-16

PROVIDED AS A COURTESY BY:
PACIFIC
PIPELINE SUPPLY

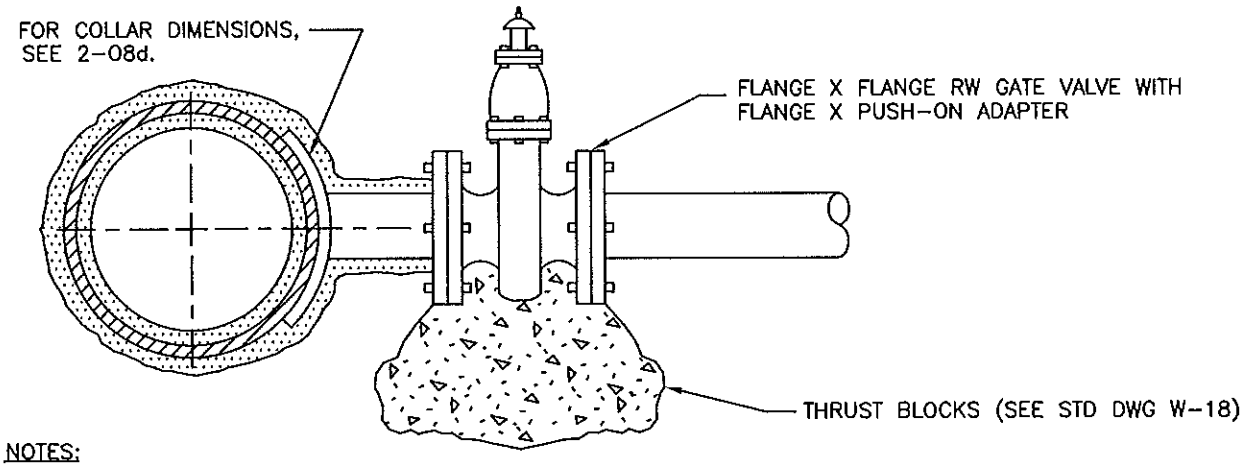

NOTES:

1. TACK WELD TO BE MADE PRIOR TO REINFORCING RODS BEING CUT.
2. NOZZLE SHALL BE WELDED TO PIPE BEFORE BACK-UP PLATE IS INSTALLED.

NOTE:

HOT TAPS ON STEEL LINES ONLY!

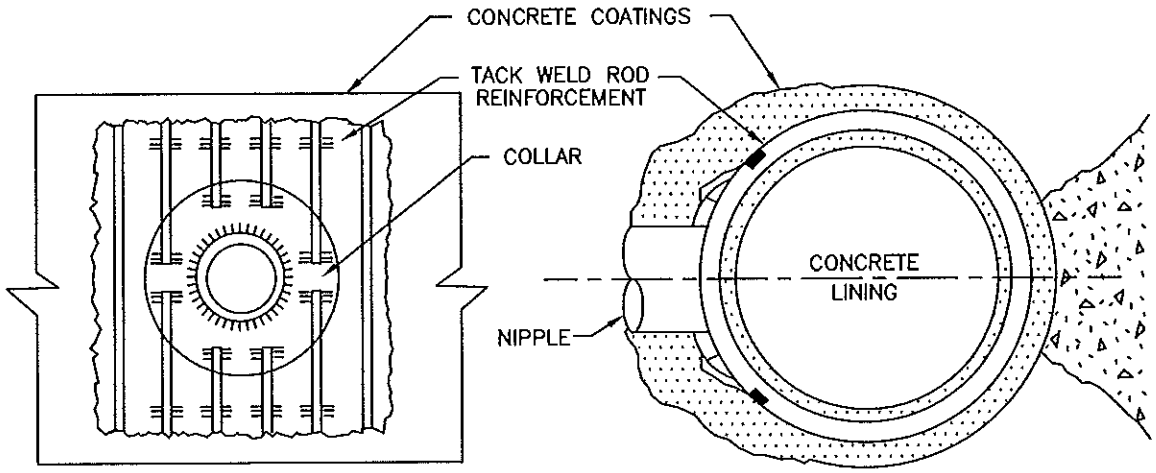

RINCON DEL DIABLO MUNICIPAL WATER DISTRICT

CHECKED BY	DATE	OUTLET CONNECTION TO STEEL PIPE	DRAWING NO.
APPROVED BY	DATE		W-17A

PROVIDED AS A COURTESY BY:
PACIFIC
PIPELINE SUPPLY

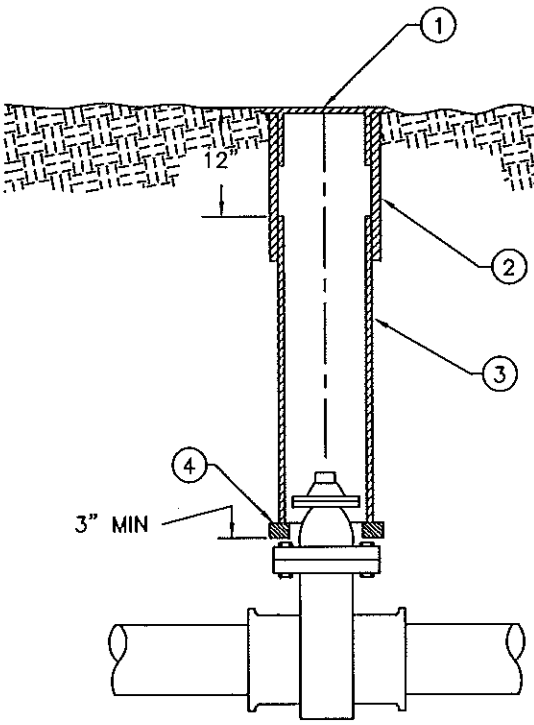

GATE WELL (GATE VALVES)

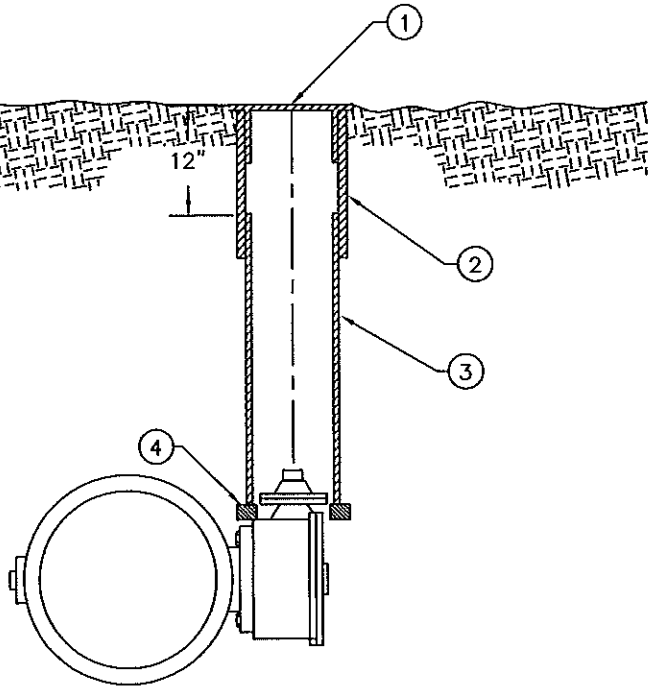

GATE WELL (BUTTERFLY VALVES)

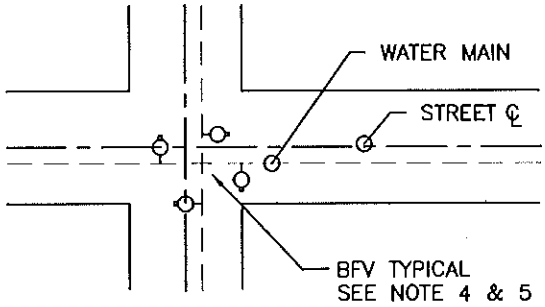

BFV OPERATOR POSITION

NOTES:

1. INSTALL "BOX LOK 2" TO SIZE OF GATE WELL, WHERE APPLICABLE (AT VALVE OPERATING NUT)
2. GATE WELL CAP MUST BE MARKED "WATER".
3. VALVES DEEPER THAN 5' REQUIRE A VALVE STEM EXTENSION – "FIBERPLAS" VAL STEM EXTENSIONS.
4. EXTENSION STEMS SHALL NOT BE ATTACHED/BOLTED TO OPERATING NUT.
5. BFV'S INSTALLED AT CROSSES OR TEES REQUIRE AN 18" FLANGED DUCTILE IRON SPOOL TO BE INSTALLED BETWEEN THE FITTING AND VALVE.
6. BFV OPERATORS TO BE LOCATED TO THE CURB LINE SIDE OF WATER MAIN.

ITEM NO.	MATERIAL SPECIFICATIONS*
1.	CAST IRON GATE WELL CAP (SOUTH BAY FOUNDRY B 6120) PAINTED HI VIS YELLOW
2.	8" O.D. x 18" EPOXY COATED 10 GA STEEL UPPER SLEEVE
3.	6" x REQUIRED LENGTH (WHITE OR BLUE) PVC C-900 PIPE
4.	2 x 4 x 12 REDWOOD BLOCKS

ALL MATERIALS SHALL BE DISTRICT APPROVED

RINCON DEL DIABLO MUNICIPAL WATER DISTRICT

CHECKED BY	DATE	GATE WELL INSTALLATION	DRAWING NO.
APPROVED BY	DATE		W-17B

PROVIDED AS A COURTESY BY:
PACIFIC
PIPELINE SUPPLY

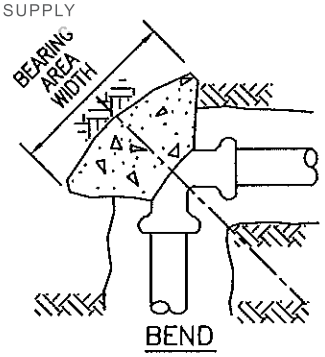

BEND

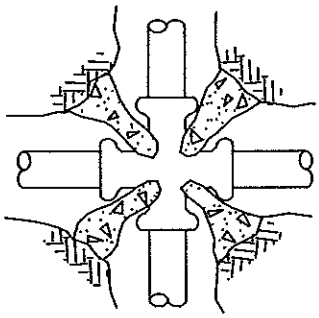

CROSS

THRUST BLOCKS SHALL BE CENTERED ON CENTER LINE OF FLOW

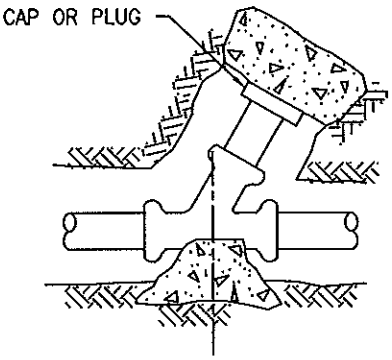

WYE

SHOWN WITH BRANCH CLOSED

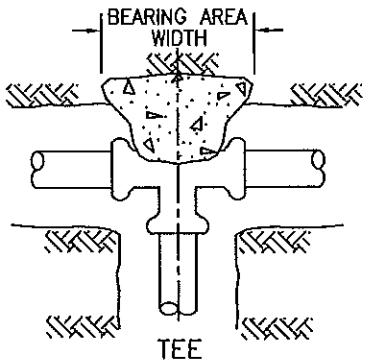

TEE

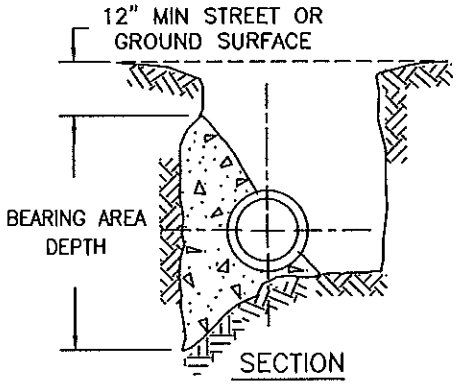

SECTION

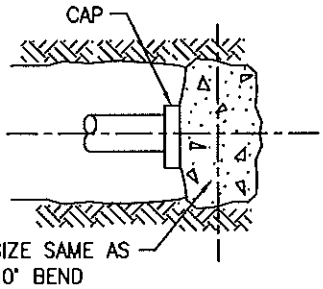

PLAN PIPE END

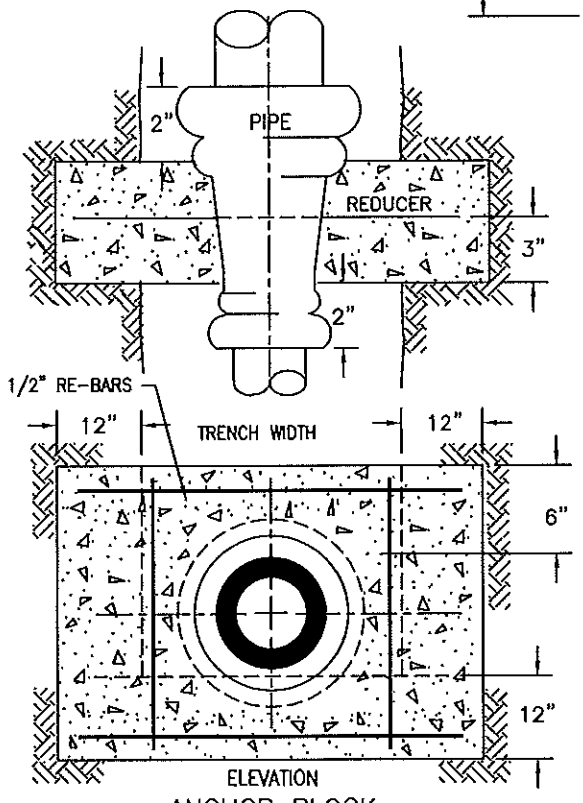

ANCHOR BLOCK

$$\frac{\text{FORCE \#'S}}{\text{BEARING LOAD}} = \text{FT}^2$$

MIN BEARING AREAS IN SQUARE FEET
CLASS 350 PIPE (DIP)

MAIN SIZE	TEES	90° BEND	45° BEND	22 ½° BEND
6"	14	19	11	6
8"	24	34	19	10
10"	38	53	29	15
12"	54	76	41	21
14"	73	103	56	29
16"	95	135	73	37
18"	121	171	92	47
20"	149	210	114	58
24"	214	303	164	84

FOR CLASS 150 PIPE, MULTIPLY BY 0.43
FOR CLASS 200 PIPE, MULTIPLY BY 0.57
FOR CLASS 250 PIPE, MULTIPLY BY 0.71
FOR CLASS 300 PIPE, MULTIPLY BY 0.86

NOTES:

1. NO THRUST BLOCKS ARE REQUIRED FOR HORIZONTAL BENDS LESS THAN 7°.
2. ALL ANCHORS AND THRUST BLOCKS SHALL BE PLACED AGAINST UNDISTURBED SOIL. ENGINEER WILL DETERMINE SIZES NOT SHOWN.
3. A SPECIAL DESIGN MAY BE REQUIRED FOR THRUST BLOCKS IF THE SOIL CONDITIONS WARRANT.
4. REFER TO SECTION 6 – CONCRETE WORK.
5. ALL THRUST BLOCKS SHALL HAVE A MINIMUM THICKNESS OF 12"

RINCON DEL DIABLO MUNICIPAL WATER DISTRICT

CHECKED BY	DATE	CONCRETE THRUST BLOCKS	DRAWING NO.
APPROVED BY	DATE		W–18

PROVIDED AS A COURTESY BY:
PACIFIC
PIPELINE SUPPLY

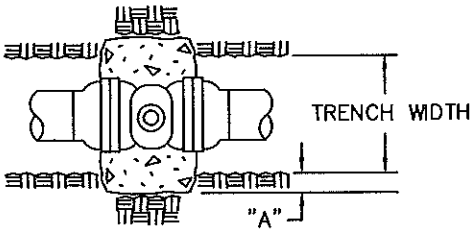

PLAN

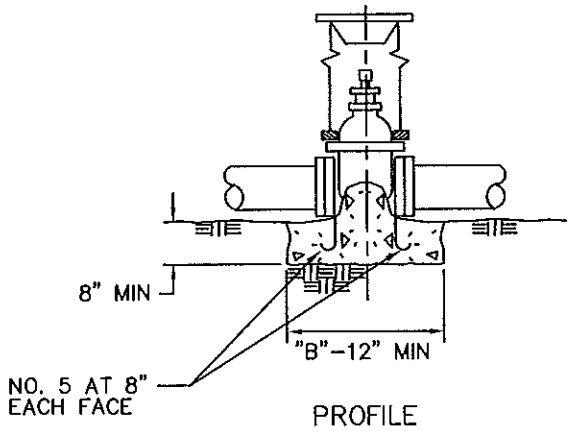

PROFILE

"A" = 8" FOR 4"–8" VALVES;
18" FOR 10" & 12" VALVES;
14" AND LARGER AS SHOWN
ON THE DRAWINGS OR AS
DIRECTED BY THE ENGINEER.

"B" = 2 TIMES THE SIZE OF
GATE VALVE THROUGH 12";
14" AND LARGER AS SHOWN
ON THE DRAWINGS OR AS
DIRECTED BY THE ENGINEER.

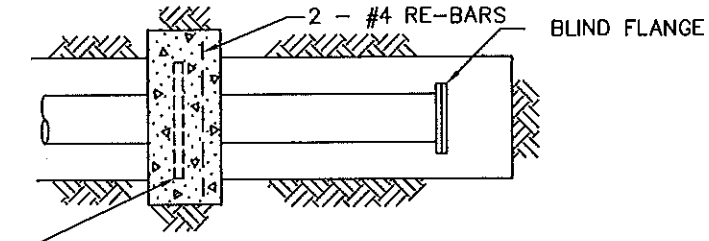

DEAD END BLOCKING

FOR PIPES UP TO 10" –
3/8" X 2" STRAPS WITH 5/8" OD
ANCHOR BOLTS. BOLTS TO EXTEND
DEPTH OF BLOCK. COAT EXPOSED
METAL PER SPECIFICATIONS.

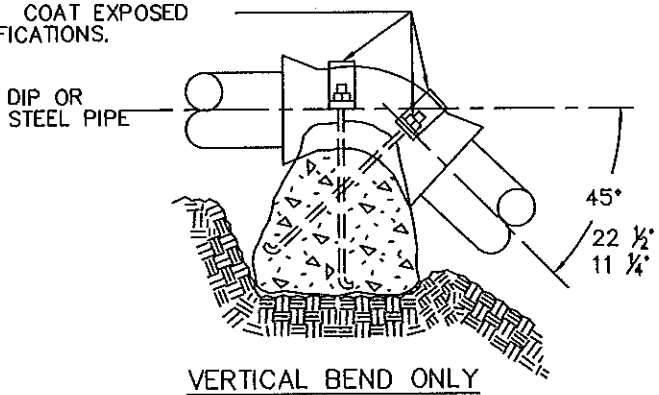

VERTICAL BEND ONLY

FOR CLASS 200 PIPE, X 1.3
FOR CLASS 250 PIPE, X 1.7
FOR CLASS 300 PIPE, X 2.0

THRUST/#'s / #'s/CU FT = CU FT CONCRETE			
SIZE OF PIPE	CONCRETE CUBIC FT VERTICAL BEND		
	45°	22–1/2°	11–1/4°
	CL–150	CL–150	CL–150
6"	41	20	10
8"	70	36	18
10"	115	58	30

NOTE:

1. CONCRETE THRUST AND ANCHOR BLOCKS SHALL BE CONSTRUCTED AS SHOWN HEREON WHERE THE RESPECTIVE FITTINGS AND PLUGS ARE INSTALLED.
2. ALL THRUST BLOCKS SHALL HAVE A MINIMUM THICKNESS OF 12"

* DESIGN REQUIRED BY APPLICANT.

RINCON DEL DIABLO MUNICIPAL WATER DISTRICT

CHECKED BY	DATE	ANCHOR BLOCKS	DRAWING NO.
APPROVED BY	DATE		W–19

PROVIDED AS A COURTESY BY:
PACIFIC
PIPELINE SUPPLY

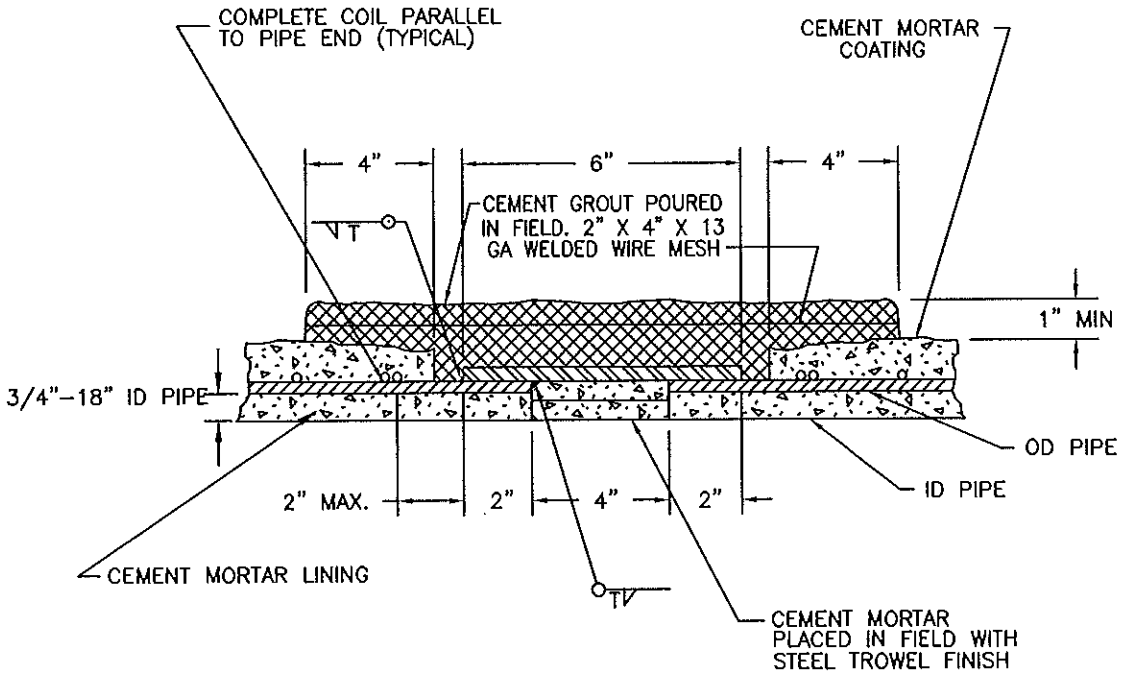

1/2"-12"-16" ID PIPE

FIELD WELDED CLOSURE

NOTES:

1. WELDED JOINTS SHALL DEVELOP FULL STRENGTH OF PIPE.
2. MINIMUM ALLOWABLE THICKNESS OF STEEL CYLINDER SHALL BE 10 GAUGE.
3. THICKNESS OF BUT STRAP SHALL BE 1/3 GREATER IN THICKNESS THAN LARGEST ADJOINING PIPE CYLINDER.
4. WELDS MAY EITHER BE ON INSIDE OR OUTSIDE.
5. THE CEMENT GROUT AND MORTAR USED SHALL HAVE A PH OF 12 OR GREATER.

RINCON DEL DIABLO MUNICIPAL WATER DISTRICT

CHECKED BY	DATE	CONCRETE CYLINDER PIPE JOINT DETAILS	DRAWING NO.
APPROVED BY	DATE		W-20

PROVIDED AS A COURTESY BY:
PACIFIC
PIPELINE SUPPLY

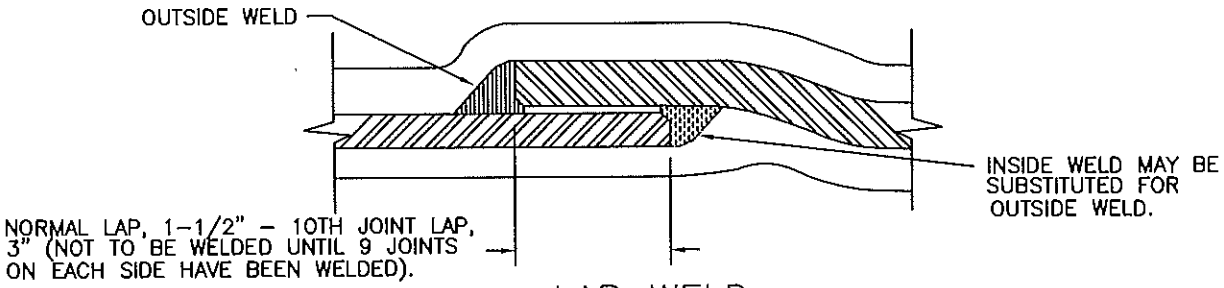

LAP WELD

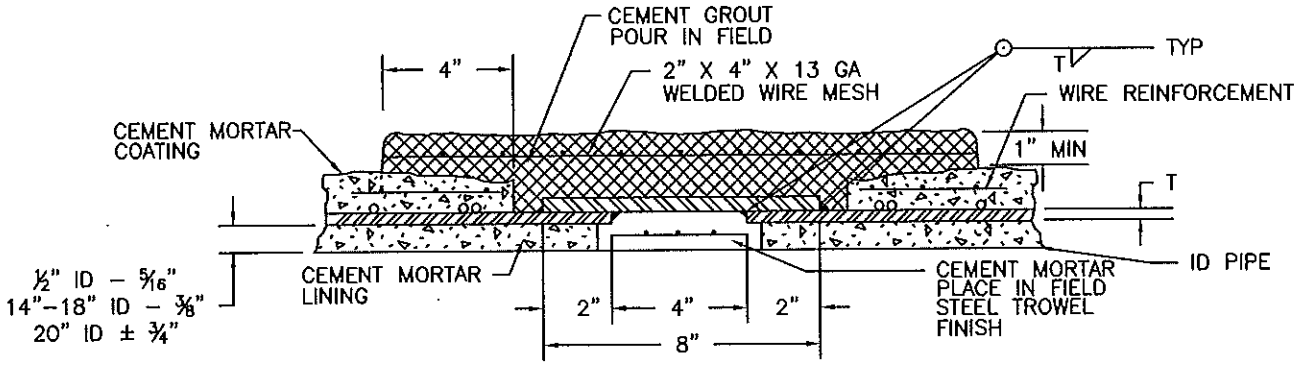

FIELD WELDED CLOSURE

NOTES:

1. WELDED JOINTS SHALL DEVELOP FULL STRENGTH OF PIPE.
2. MINIMUM ALLOWABLE THICKNESS OF STEEL CYLINDER SHALL BE 10 GAUGE.
3. THICKNESS OF BUTT STRAP SHALL BE 1/3 GREATER IN THICKNESS THAN LARGEST ADJOINING PIPE CYLINDER.
4. WELDS MAY EITHER BE ON INSIDE OR OUTSIDE.
5. THE CEMENT GROUT AND MORTAR USED SHALL HAVE A PH OF 12 OR GREATER

RINCON DEL DIABLO MUNICIPAL WATER DISTRICT

CHECKED BY	DATE	WELDED STEEL CML&C PIPE JOINT DETAILS	DRAWING NO.
APPROVED BY	DATE		W-21

PROVIDED AS A COURTESY BY:
PACIFIC
PIPELINE SUPPLY

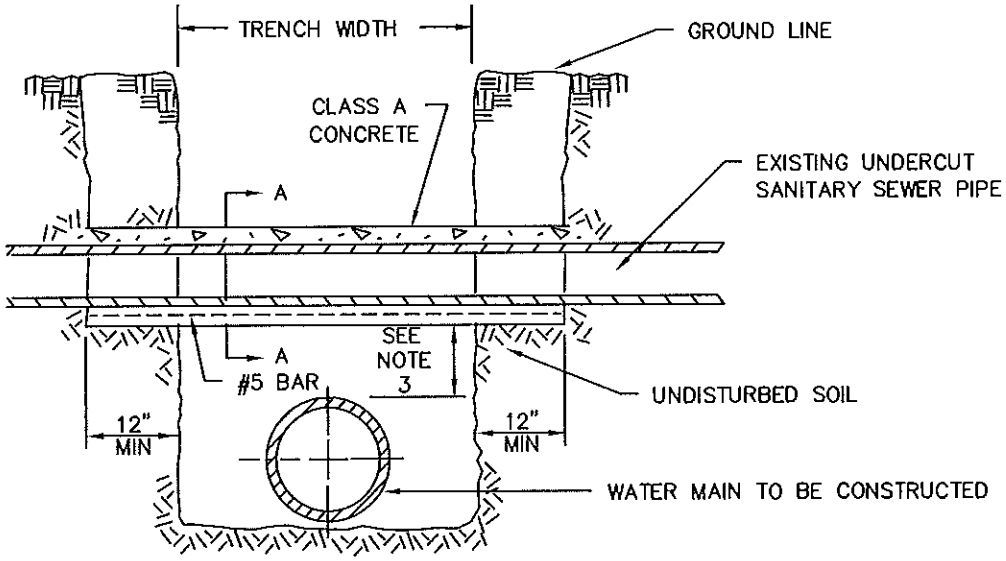

TYPICAL SECTION

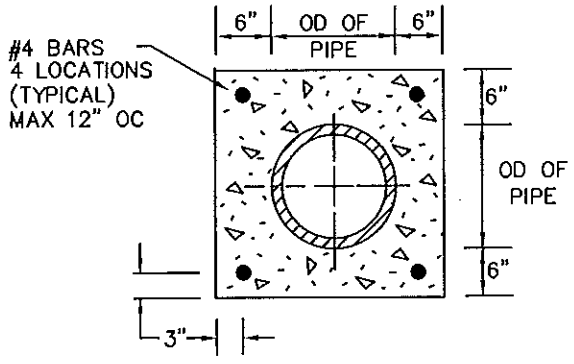

SECTION A–A

NOTES:

1. THIS DETAIL SHALL BE USED FOR ALL UNDERCUT SEWER MAINS AND LATERALS.
2. FOR SEWER LATERALS WHICH INTERFERE WITH WATER MAIN, THE WATER MAIN SHALL BE LOWERED TO AVOID CONFLICT AT NO COST TO THE DISTRICT.
3. CLEARANCES BETWEEN WATER LINES AND SEWER LINES SHALL BE IN ACCORDANCE WITH THE STATE PUBLIC HEALTH GUIDELINES.

RINCON DEL DIABLO MUNICIPAL WATER DISTRICT

CHECKED BY	DATE	STANDARD SUPPORT FOR UNDERCUT SEWER PIPE	DRAWING NO.
APPROVED BY	DATE		W–22

PROVIDED AS A COURTESY BY:
PACIFIC
PIPELINE SUPPLY

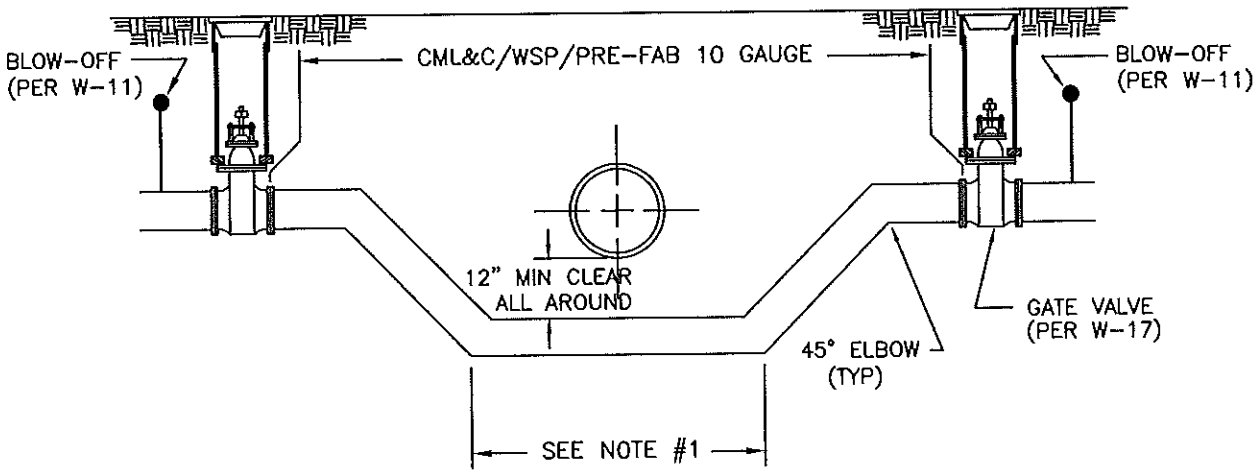

LOWERING

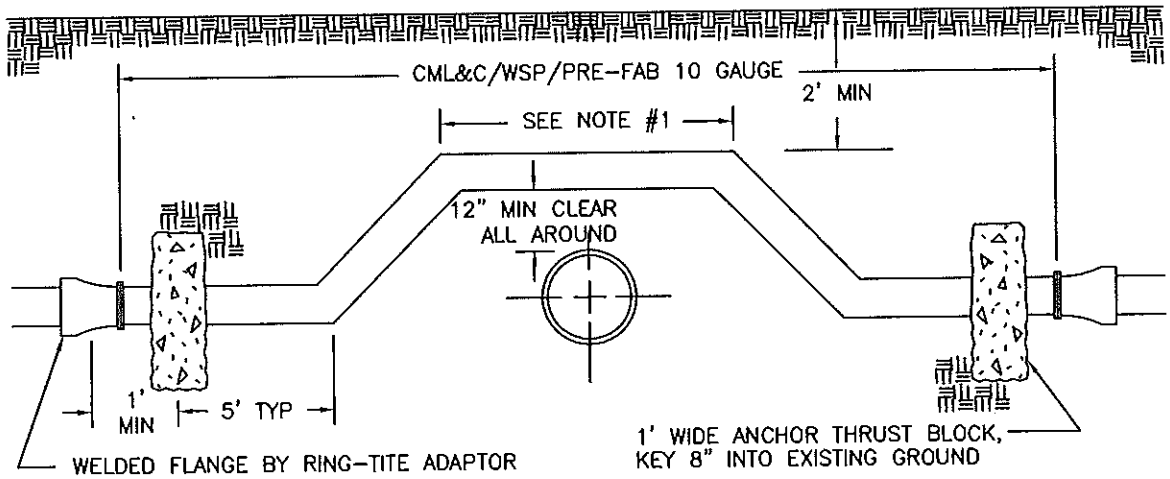

CROSSING

NOTES:

1. WHEN A SEWER LINE IS INVOLVED, THE INSTALLATION MAY VARY ACCORDING TO HEALTH DEPARTMENT STANDARDS.
2. THRUST BLOCKS SHALL BE REQUIRED PER W-18 & W-19.
3. ADDITIONAL APPURTENANCES MAY BE REQUIRED.

RINCON DEL DIABLO MUNICIPAL WATER DISTRICT

CHECKED BY	DATE	ALTERNATE METHODS OF WATERLINE INSTALLATIONS	DRAWING NO.
APPROVED BY	DATE		W-23

PROVIDED AS A COURTESY BY:
PACIFIC
PIPELINE SUPPLY

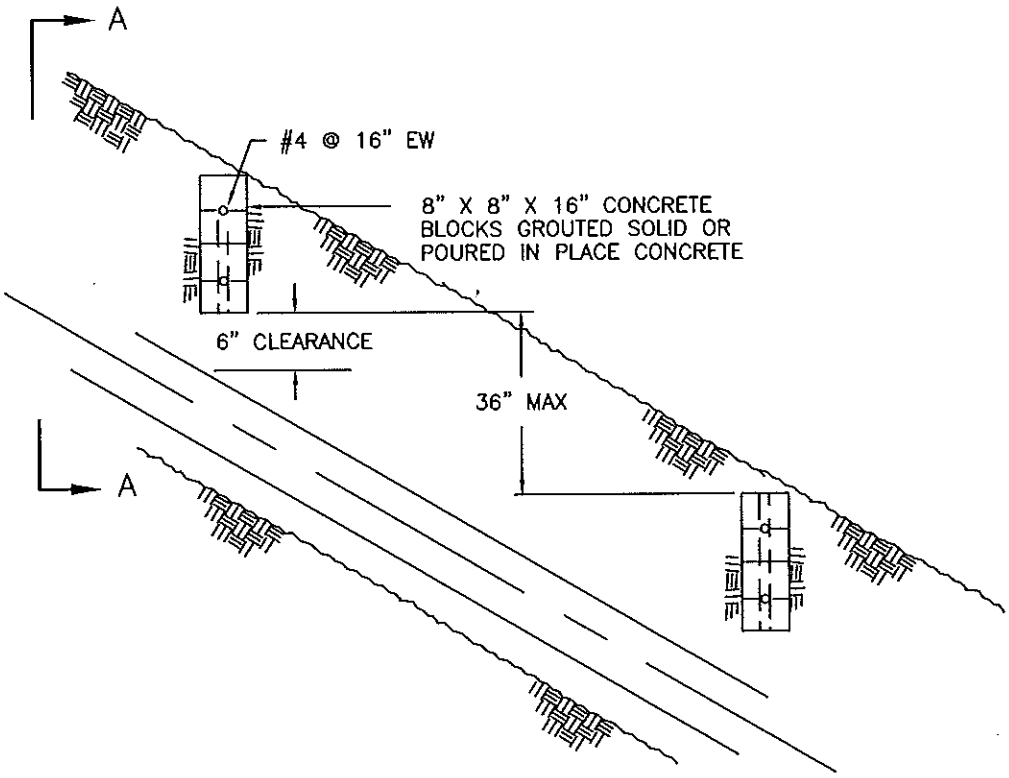

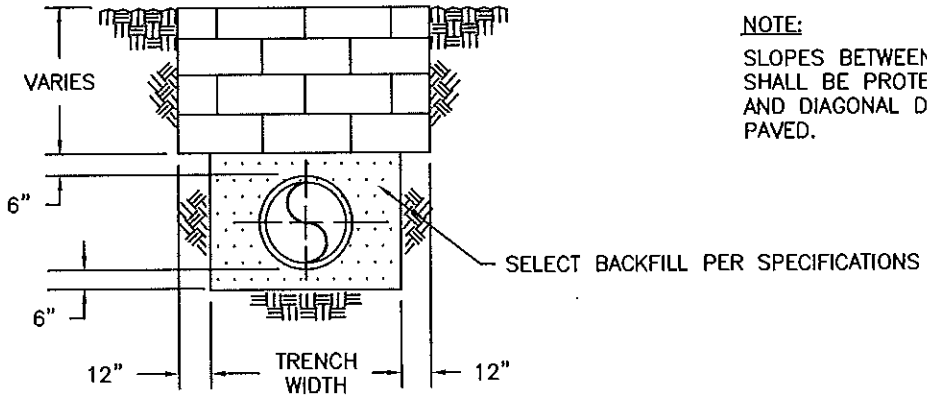

SECTION A–A

NOTE:

SLOPES BETWEEN 10% AND 30% SHALL BE PROTECTED WITH HAY AND DIAGONAL DITCHES UNLESS PAVED.

RINCON DEL DIABLO MUNICIPAL WATER DISTRICT

CHECKED BY	DATE	SLOPE PROTECTION FOR GRADES 30 PERCENT AND LARGER	DRAWING NO.
APPROVED BY	DATE		W–24

PROVIDED AS A COURTESY BY:
PACIFIC
PIPELINE SUPPLY

THIS PAGE INTENTIONALLY LEFT BLANK

RINCON DEL DIABLO MUNICIPAL WATER DISTRICT

CHECKED BY	DATE		DRAWING NO.
APPROVED BY	DATE		W-25

PROVIDED AS A COURTESY BY:
PACIFIC
PIPELINE SUPPLY

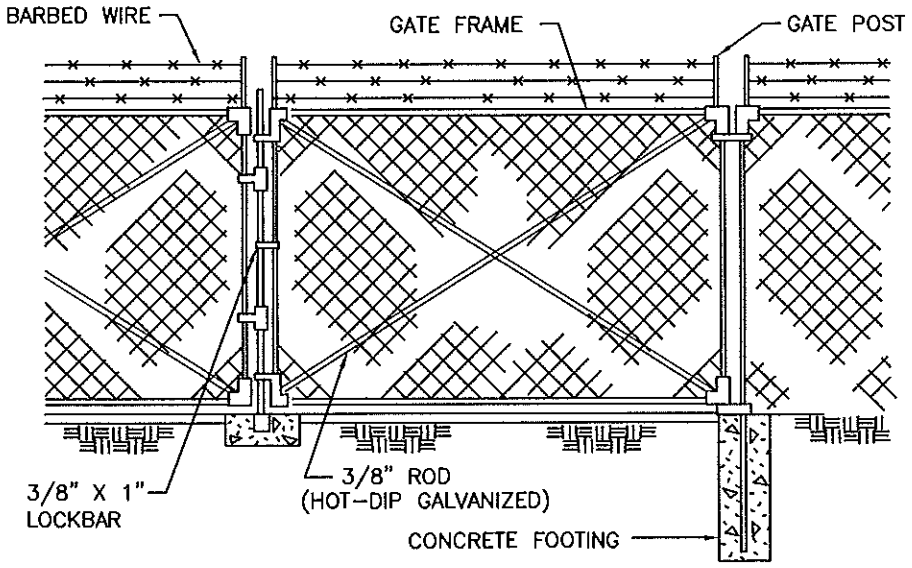

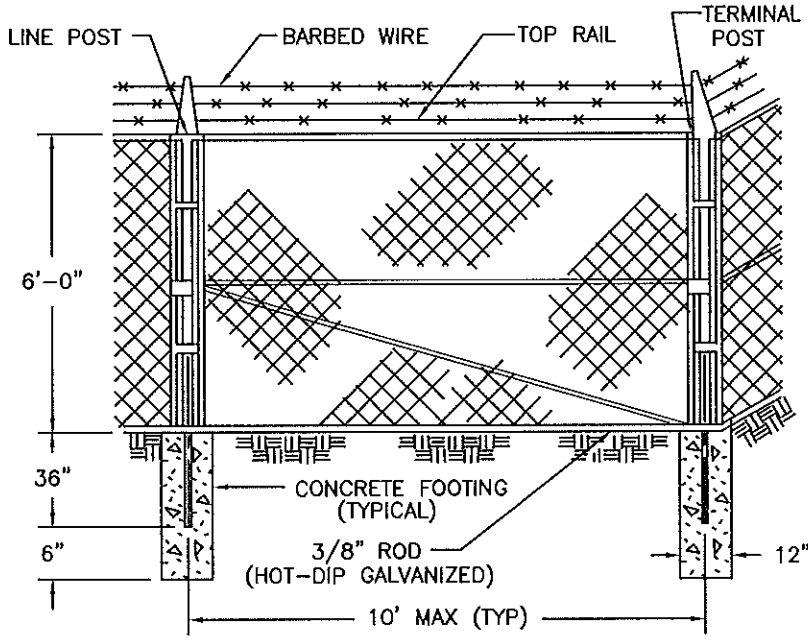

CHAIN LINK FABRIC
NO. 9 WIRE 2" MESH

LINE POSTS
HOT-DIP GALVANIZED
2" DIAMETER PIPE

TERMINAL POSTS
END, CORNER, & PULL POSTS, HOT-DIP GALVANIZED PIPE, 3" OD, 5.79 LBS PER LINEAL FOOT

TOP RAIL
HOT-DIP GALVANIZED PIPE 1-5/8" OD OR H-SECTION, WEIGHT 2.27 LBS/FOOT

BRACES
SAME AS TOP RAIL. (TO BE SPACED MID-WAY BETWEEN TOP RAIL AND GROUND)

FABRIC BANDS
FABRIC TO BE FASTENED TO LINE POSTS W/FABRIC BANDS SPACED APPROX 14" APART & TO TOP RAIL 24" APART

NOTE:
BARBED WIRE TO BEND 45° AWAY FROM ENCLOSURE. FENCING SHALL BE HOT-DIP GALVANIZED OR PLASTIC COATED, COLOR TO BE DETERMINED BY THE DISTRICT.

GATE FRAME	GATE OPENING		GATE POST	WEIGHT (LBS/FT)
	SINGLE	DOUBLE		
2" OD	TO 6'-0"	TO 12'-0" INCL.	3" OD	5.79
2" OD	OVER 6'-0" TO 13'-0"	OVER 12'-0" TO 26'-0"	4" OD	9.11
2" OD	OVER 13'-0" TO 18'-0"	———	6-5/8" OD	18.97

RINCON DEL DIABLO MUNICIPAL WATER DISTRICT

CHECKED BY	DATE	CHAIN LINK FENCE & GATE DETAILS	DRAWING NO.
APPROVED BY	DATE		W-26